11086 HYUNDAI GENESIS COUPE

1/25/2013

GROSS LOAD CAPACITY WHEN USED AS A WEIGHT CARRYING HITCH: 2,000 LBS. TRAILER WEIGHT & 200 LBS. TONGUE WEIGHT.
*****DO NOT EXCEED VEHICLE MANUFACTURER'S RECOMMENDED TOWING CAPACITY.*****
WARNING: ALL NON-TRAILER LOADS APPLIED TO THIS PRODUCT MUST BE SUPPORTED BY AUXILIARY STABILIZING STRAPS.
**** FAILURE TO PROPERLY SUPPORT NON-TRAILER LOADS WILL VOID PRODUCT WARRANTY****
HAVING INSTALLATION QUESTIONS? CALL TECHNICAL SUPPORT AT 1-800-798-0813

Parts List			
ITEM	QTY	PART NUMBER	DESCRIPTION
1	2	1/2-13 x 1 1/2	CARRIAGE BOLT
2	2	CM-SP6	.250 x 1.00 x 3.00" SQUARE HOLE SPACER
3	2	1_2 FISHWIRE	1/2" FISHWIRE
4	2	HFN 1213	HEX FLANGE NUT
5	4	3/8"	CONICAL TOOTHED WASHER
6	4	M8 - 1.25 x 30 HEX BOLT	HEX HEAD BOLT

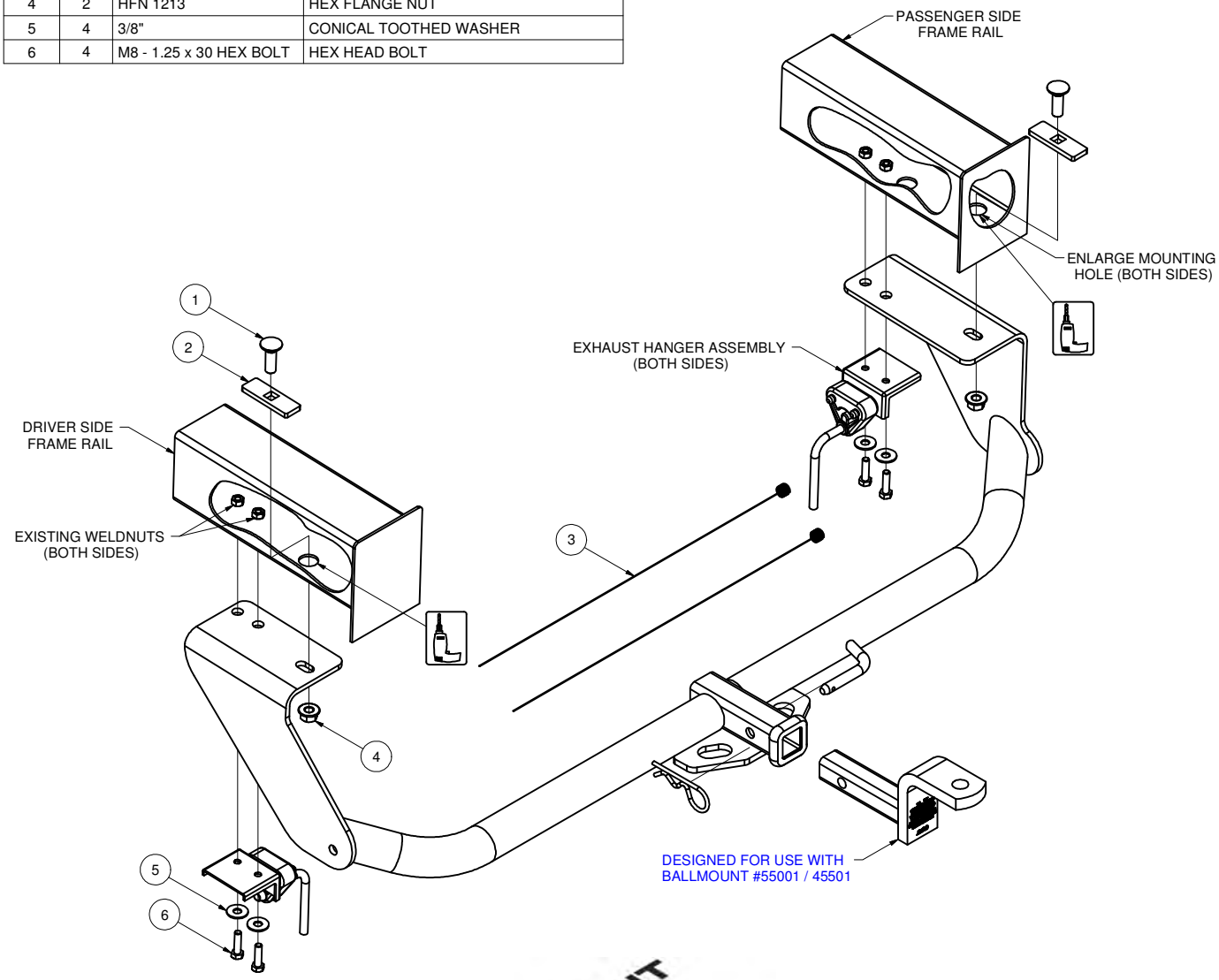

HITCH WEIGHT: 32 LBS.

INSTALL TIME

PROFESSIONAL: 30 MINUTES

NOVICE (DIY): 60 MINUTES

INSTALL NOTES:
- LOWER EXHAUST
- ENLARGE HOLES
- FISHWIRE HARDWARE

TOOLS REQUIRED
SOCKET WRENCH
12mm SOCKET
3/4" SOCKET
6" SOCKET EXTENSION
TORQUE WRENCH
ROTARY TOOL / DIE GRINDER

PERIODICALLY CHECK THIS RECEIVER HITCH TO ENSURE THAT ALL FASTENERS ARE TIGHT AND THAT ALL STRUCTURAL COMPONENTS ARE SOUND.

Curt Manufacturing Inc., warrants this product to be free of defects in material and/or workmanship at the time of retail purchase by the original purchaser. If the product is found to be defective, Curt Manufacturing Inc., may repair or replace the product, at their option, when the product is returned, prepaid, with proof of purchase. Alteration to, misuse of, or improper installation of this product voids the warranty. Curt Manufacturing Inc.'s liability is limited to repair or replacement of products found to be defective, and specifically excludes liability for incidental or consequential loss or damage.

GROSS LOAD CAPACITY WHEN USED AS A WEIGHT CARRYING HITCH: 2,000 LBS. TRAILER WEIGHT & 200 LBS. TONGUE WEIGHT.

*****DO NOT EXCEED VEHICLE MANUFACTURER'S RECOMMENDED TOWING CAPACITY.*****

WARNING: ALL NON-TRAILER LOADS APPLIED TO THIS PRODUCT MUST BE SUPPORTED BY AUXILIARY STABILIZING STRAPS.

**** FAILURE TO PROPERLY SUPPORT NON-TRAILER LOADS WILL VOID PRODUCT WARRANTY****

HAVING INSTALLATION QUESTIONS? CALL TECHNICAL SUPPORT AT 1-800-798-0813

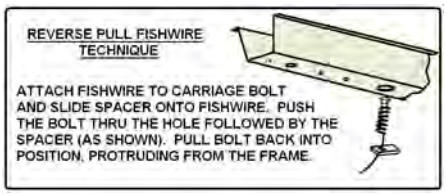

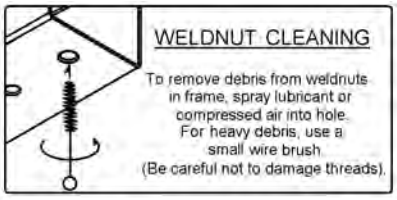

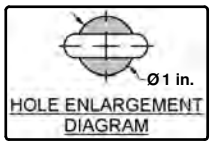

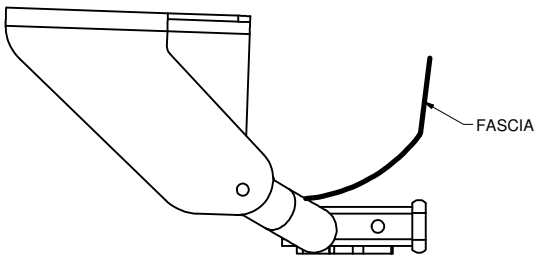

INSTALLED HITCH POSITION

INSTALLATION STEPS

1. Locate and remove rubber cap from mounting hole on driver side frame rail. (Discard cap.)
2. Locate and remove rear rubber cap from mounting hole on passenger side frame rail. (Discard cap.)
3. Enlarge driver and passenger side mounting holes enough to allow 1/2-13 carriage bolts and CM-SP6 spacers to pass through. (See HOLE ENLARGEMENT DIAGRAM.)
4. Reverse fishwire 1/2-13 carriage bolts and CM-SP6 spacers through mounting holes, as shown. Leave fishwires attached to hardware for ease of hitch installation. (See REVERSE PULL FISHWIRE TECHNIQUE diagram.)
5. Lower exhaust by removing two (2) M8 bolts per exhaust hanger bracket assembly on driver and passenger side of vehicle. (Discard factory M8 bolts.)
6. Raise hitch over exhaust and reattach exhaust hangers with supplied M8 hex bolts and 3/8 in. conical toothed washers, as shown. The hitch side plates will be located between the exhaust hanger brackets and frame rails.
7. Remove fishwires from Step 4 and secure hitch with 1/2-13 hex flange nuts.
8. Torque 1/2 in. hardware to 110 lb-ft and M8 hardware to 23 lb-ft.

PERIODICALLY CHECK THIS RECEIVER HITCH TO ENSURE THAT ALL FASTENERS ARE TIGHT AND THAT ALL STRUCTURAL COMPONENTS ARE SOUND.

Curt Manufacturing Inc., warrants this product to be free of defects in material and/or workmanship at the time of retail purchase by the original purchaser. If the product is found to be defective, Curt Manufacturing Inc., may repair or replace the product, at their option, when the product is returned, prepaid, with proof of purchase. Alteration to, misuse of, or improper installation of this product voids the warranty. Curt Manufacturing Inc.'s liability is limited to repair or replacement of products found to be defective, and specifically excludes liability for incidental or consequential loss or damage.