11278 INSTALLATION INSTRUCTIONS

Safety glasses should be worn at all times while installing this product.

YEARS: 2012 | **MAKE:** CHEVROLET | **MODEL:** ORLANDO (ALL MODELS) | **STYLE:** HATCH BACK

WARNING: NEVER EXCEED YOUR VEHICLE MANUFACTURER'S RECOMMENDED TOWING CAPACITY

WEIGHT CARRYING:

TRAILER WEIGHT:	2000	LBS.
TONGUE WEIGHT:	200	LBS.

WARNING:
WE RECOMMEND THE USE OF 18050 STABILIZING STRAPS FOR ALL NON-TRAILER (WHEEL-LESS) LOADS. PLEASE SEE THE CURT CATALOG OR VISIT US ONLINE AT WWW.CURTMFG.COM FOR FURTHER INFORMATION.

INSTALLATION TIME: 30 MIN.

THE INSTALL TIME LISTED IS FOR PROFESSIONAL INSTALLERS. IF YOU ARE HESITANT TO UNDERTAKE THIS TASK ON YOUR OWN, CONTACT AN AUTHORIZED CURT INSTALLER FOR ADDITIONAL ASSISTANCE.

INSTALLATION REQUIRES:

SAFETY GLASSES

1/2"
5/8"
SOCKET

1/2"
SOCKET EXTENSION

PRY BAR

TORQUE WRENCH

RATCHET

AVIATION SHEARS

MARKER

SCREW DRIVER

INSTALLATION TIPS:

1. *BEFORE YOU BEGIN INSTALLATION, READ ALL INSTRUCTIONS THOROUGHLY.*
2. *TO EASE INSTALLATION, 2 PEOPLE MAY BE REQUIRED.*
3. *USING PROPER TOOLS WILL GREATLY IMPROVE THE QUALITY OF THE INSTALL AND REDUCE THE TIME REQUIRED.*
4. *NEED HELP OR HAVE SOME QUESTIONS? CALL TECHNICAL SUPPORT AT 800.798.0813*

LEVEL OF DIFFICULTY: MODERATE

EASY | ***MODERATE*** | ***CHALLENGING***

- NO DRILLING REQUIRED

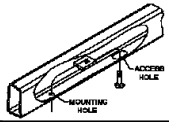

- FISHWIRE HARDWARE

- HEAT SHIELD TRIMMING IS REQUIRED

- LOWER EXHAUST

VEHICLE PHOTO:

REPRESENTATIVE PHOTO

HITCH ILLUSTRATION:

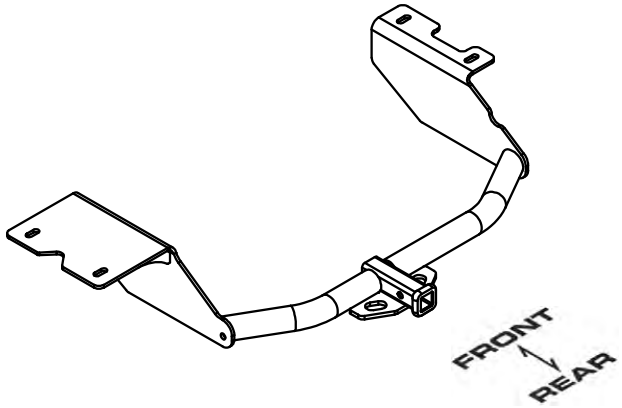

MAKE SURE YOUR HITCH MATCHES

PERIODICALLY CHECK THIS RECEIVER HITCH TO ENSURE ALL FASTENERS ARE TIGHT AND ALL STRUCTURAL COMPONENTS ARE SOUND

CURT Manufacturing LLC. warrants this product to be free of defects in material and/or workmanship at the time of retail purchase by the original purchaser. If the product is found to be defective, Curt Manufacturing LLC. may repair or replace the product at their option, when the product is returned, prepaid, with proof of purchase. Alteration to, misuse of, or improper installation of this product voids the warranty. Curt Manufacturing LLC.'s liability is limited to repair or replacement of products found to be defective, and specifically excludes liability for incidental or consequential loss or damage.

For more information log onto www.curtmfg.com, & for helpful towing tips log onto www.hitchinfo.com

1/30/2013

INSTALLATION WALKTHROUGH:

Parts List			
ITEM	QTY	PART NUMBER	DESCRIPTION
1	4	7/16-14 x 1 1/2	CARRIAGE BOLT
2	4	CM-SP2	.250 x .88 x 2.25" SQUARE HOLE SPACER
3	4	7/16-14	HEX FLANGE NUT
4	4	7_16 FISHWIRE	7/16" FISHWIRE

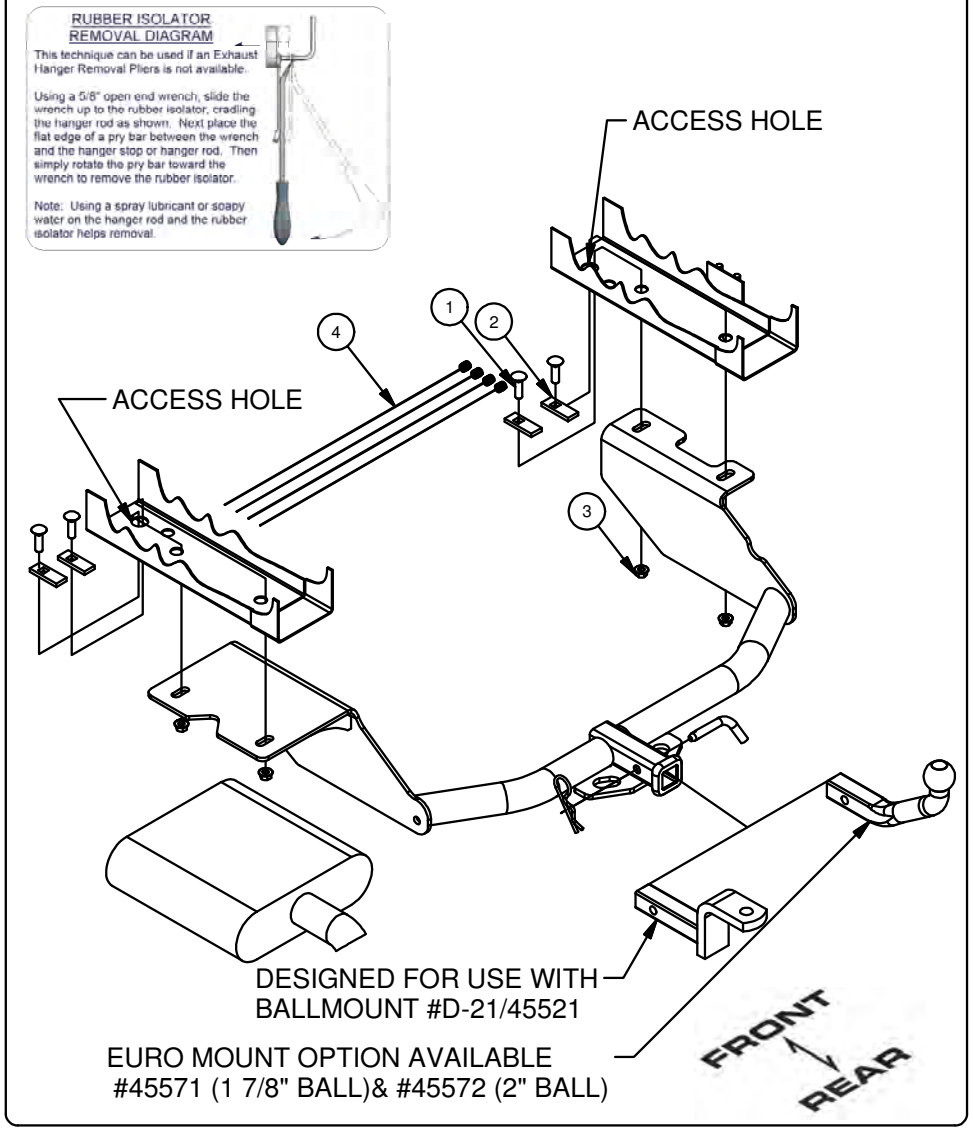

1. Support the exhaust system to avoid damage during installation. Remove the rubber isolators located behind the spare tire cage on both drivers side and passenger side . (See Rubber isolator removal diagram.)

2. Lower the exhaust by removing the muffler bracket as shown and allow to hang while still supporting it.

For more information log onto www.curtmfg.com, & for helpful towing tips log onto www.hitchinfo.com

INSTALLATION WALKTHROUGH:

3. Remove the heat shield from vehicle by first using a screwdriver to remove (3) speed nuts securing it to the trunk pan and then using pliers removing the spring clip as shown.

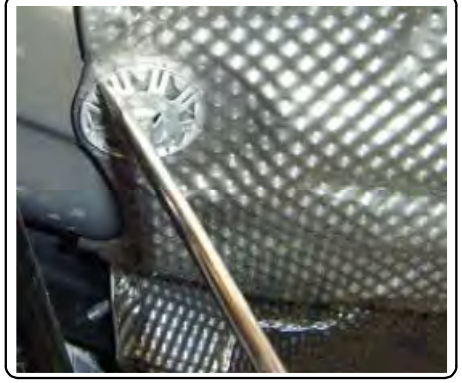

4. Using Aviation shears, trim the heat shield as shown and reinstall the unhatched section on the trunk pan. (See heat shield trimming)

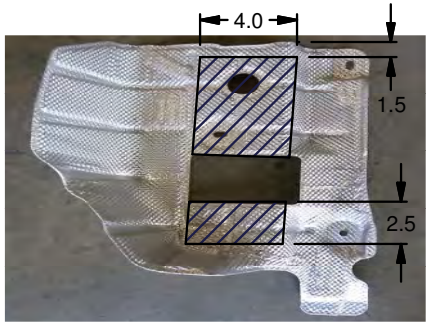

HEAT SHIELD TRIMMING

5. Using the access hole in the frame rail, fishwire 7/16-14 carriage bolt and CM-SP2spacer through the frame rail and out each of the (4) mounting holes. (See Fishwire technique diagram)

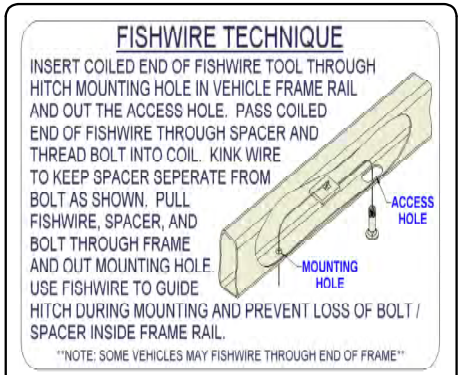

6. Taking care not to push the fishwired hardware into the frame rails, raise the hitch into position, aligning the fishwired hardware with the slots in the hitch side plates. Loosely secure the hitch to the vehicle using the (4) 7/16" hex flange nuts as shown.

For more information log onto www.curtmfg.com, & for helpful towing tips log onto www.hitchinfo.com

INSTALLATION WALKTHROUGH:

7. Reinstall the muffler bracket and both rubber isolator mounts.

8. Torque all 7/16" hardware to 70 ft-lbs. (Installation is complete.)

For more information log onto www.curtmfg.com, & for helpful towing tips log onto www.hitchinfo.com

11278 CHEVY ORLANDO

1/30/2013

GROSS LOAD CAPACITY WHEN USED AS A WEIGHT CARRYING HITCH: 2000 LBS. TRAILER WEIGHT & 200 LBS. TONGUE WEIGHT.

*****DO NOT EXCEED VEHICLE MANUFACTURER'S RECOMMENDED TOWING CAPACITY.*****

WARNING: ALL NON-TRAILER LOADS APPLIED TO THIS PRODUCT MUST BE SUPPORTED BY 18050 STABILIZING STRAPS.

**** FAILURE TO PROPERLY SUPPORT NON-TRAILER LOADS WILL VOID PRODUCT WARRANTY****

HAVING INSTALLATION QUESTIONS? CALL TECHNICAL SUPPORT AT 1-800-798-0813

Parts List

ITEM	QTY	PART NUMBER	DESCRIPTION
1	4	7/16-14 x 1 1/2	CARRIAGE BOLT
2	4	CM-SP2	.250 x .88 x 2.25" SQUARE HOLE SPACER
3	4	7/16-14	HEX FLANGE NUT
4	4	7_16 FISHWIRE	7/16" FISHWIRE

RUBBER ISOLATOR REMOVAL DIAGRAM

This technique can be used if an Exhaust Hanger Removal Pliers is not available.

Using a 5/8" open end wrench, slide the wrench up to the rubber isolator, cradling the hanger rod as shown. Next place the flat edge of a pry bar between the wrench and the hanger stop or hanger rod. Then simply rotate the pry bar toward the wrench to remove the rubber isolator.

Note: Using a spray lubricant or soapy water on the hanger rod and the rubber isolator helps removal.

FISHWIRE TECHNIQUE

INSERT COILED END OF FISHWIRE TOOL THROUGH HITCH MOUNTING HOLE IN VEHICLE FRAME RAIL AND OUT THE ACCESS HOLE. PASS COILED END OF FISHWIRE THROUGH SPACER AND THREAD BOLT INTO COIL. KINK WIRE TO KEEP SPACER SEPERATE FROM BOLT AS SHOWN. PULL FISHWIRE, SPACER, AND BOLT THROUGH FRAME AND OUT MOUNTING HOLE. USE FISHWIRE TO GUIDE HITCH DURING MOUNTING AND PREVENT LOSS OF BOLT / SPACER INSIDE FRAME RAIL.

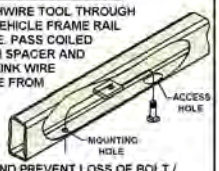

"NOTE: SOME VEHICLES MAY FISHWIRE THROUGH END OF FRAME"

TOOLS REQUIRED
5/8" SOCKET
1/2" SOCKET
TORQUE WRENCH
6" EXTENSION
AVIATION SHEARS
SCREW DRIVER
RATCHET
PRY BAR
PLIERS

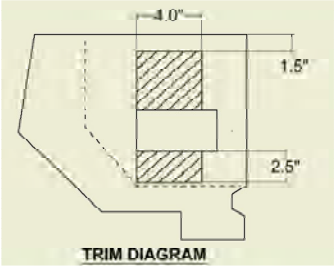

TRIM DIAGRAM

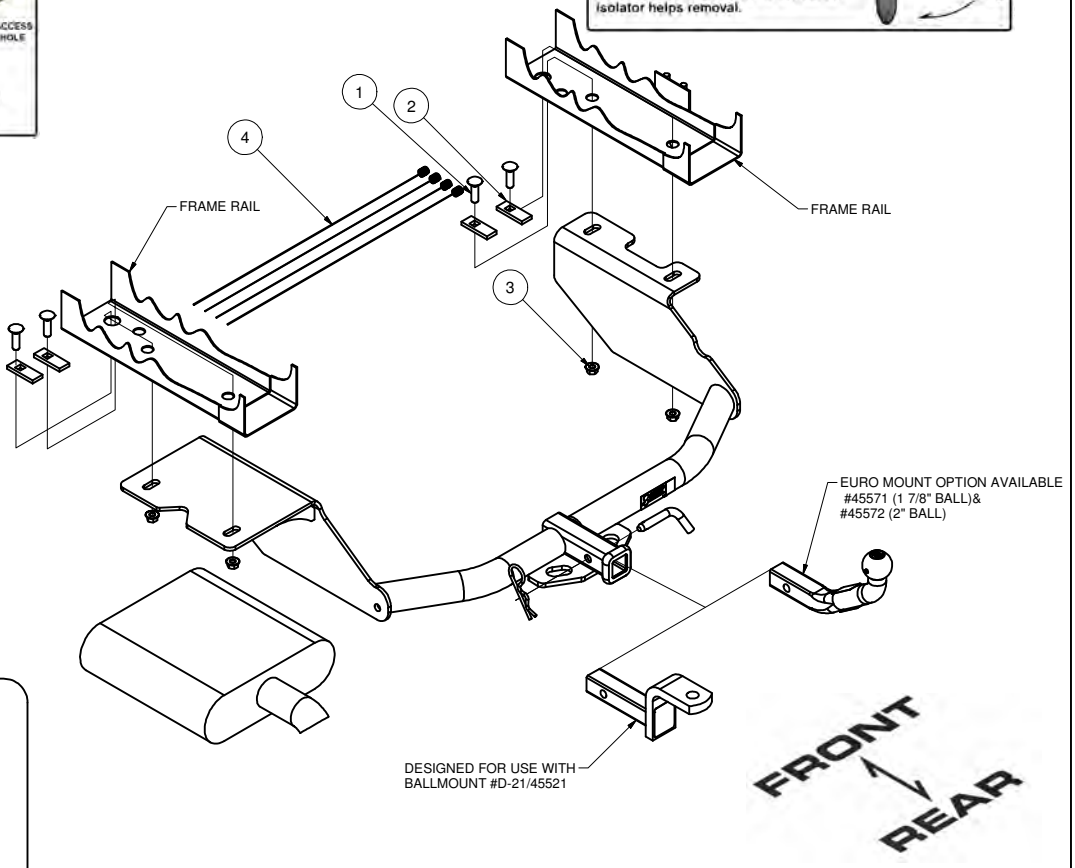

HITCH WEIGHT: 31 LBS.

INSTALL TIME

PROFESSIONAL: 30 MINUTES

NOVICE (DIY): 60 MINUTES

INSTALL NOTES:
- NO DRILLING REQUIRED
- FISHWIRE HARDWARE
- LOWER EXHAUST
- TRIM HEAT SHIELD

INSTALLATION STEPS

1. Support the exhaust system to avoid damage during installation. Remove the rubber isolators located behind the spare tire cage on both drivers side and passenger side. (See Rubber isolator removal diagram)
2. Lower exhaust by removing the muffler bracket using a 1/2" socket. Support the exhaust to avoid damaging it.
3. Remove the drivers side heat shield by first using a screwdriver to remove (3) speed nuts securing it to trunk pan and then using pliers removing the spring clip. Using aviation shears, trim the heat shield as shown and reinstall the unattached section on the trunk pan.
4. Using the access hole in the frame rails, fishwire a 7/16-14 carriage bolt and CM-SP2 spacer though the frame rail and out of each of the (4) mounting holes as shown. (See Fishwire Technique)
5. Taking care not to push the fishwired hardware into the frame rails, raise the hitch into position, aligning the fishwired hardware with the slots in the hitch side plates. Loosely secure the hitch to the vehicle drivers side first over the exhaust using the (4) 7/16 hex flange nuts as shown.
6. Reinstall the muffler bracket and both rubber isolator mounts. Torque all hardware to 70 ft-lbs.

PERIODICALLY CHECK THIS RECEIVER HITCH TO ENSURE THAT ALL FASTENERS ARE TIGHT AND THAT ALL STRUCTURAL COMPONENTS ARE SOUND.

Curt Manufacturing LLC., warrants this product to be free of defects in material and/or workmanship at the time of retail purchase by the original purchaser. If the product is found to be defective, Curt Manufacturing LLC., may repair or replace the product, at their option, when the product is returned, prepaid, with proof of purchase. Alteration to, misuse of, or improper installation of this product voids the warranty. Curt Manufacturing LLC.'s liability is limited to repair or replacement of products found to be defective, and specifically excludes liability for incidental or consequential loss or damage.