11814

92-97MERCEDES S CLASS COUPE SEC (EXCEPT SL COUPE ROADSTER)
92-99 MERCEDES S CLASS SEDAN (INCL. SD, SE, SEL)
98-99 MERCEDES CL COUPE

11/13/2017

GROSS LOAD CAPACITY WHEN USED AS A WEIGHT CARRYING HITCH: 2,000 LBS. TRAILER WEIGHT & 200 LBS. TONGUE WEIGHT.

DO NOT EXCEED VEHICLE MANUFACTURER'S RECOMMENDED TOWING CAPACITY.

WARNING: ALL NON-TRAILER LOADS APPLIED TO THIS PRODUCT MUST BE SUPPORTED BY 18050 STABILIZING STRAPS.

** FAILURE TO PROPERLY SUPPORT NON-TRAILER LOADS WILL VOID PRODUCT WARRANTY**

HAVING INSTALLATION QUESTIONS? CALL TECHNICAL SUPPORT AT 1-800-798-0813

Parts List

ITEM	QTY	PART NUMBER	DESCRIPTION
1	3	7/16-14 x 1 1/4	HEX BOLT
2	4	7/16-14 x 1 1/2	HEX BOLT
3	14	7/16 WASHER	WASHER
4	7	7/16 LOCK WASHER	HELICAL LOCK WASHER
5	7	7/16-14	HEX NUT
6	1	CM-11814-DMP	.188 DRIVER SIDE MOUNTING PLATE
7	1	CM-11814-PMP	.188 PASSENGER SIDE MOUNTING PLATE

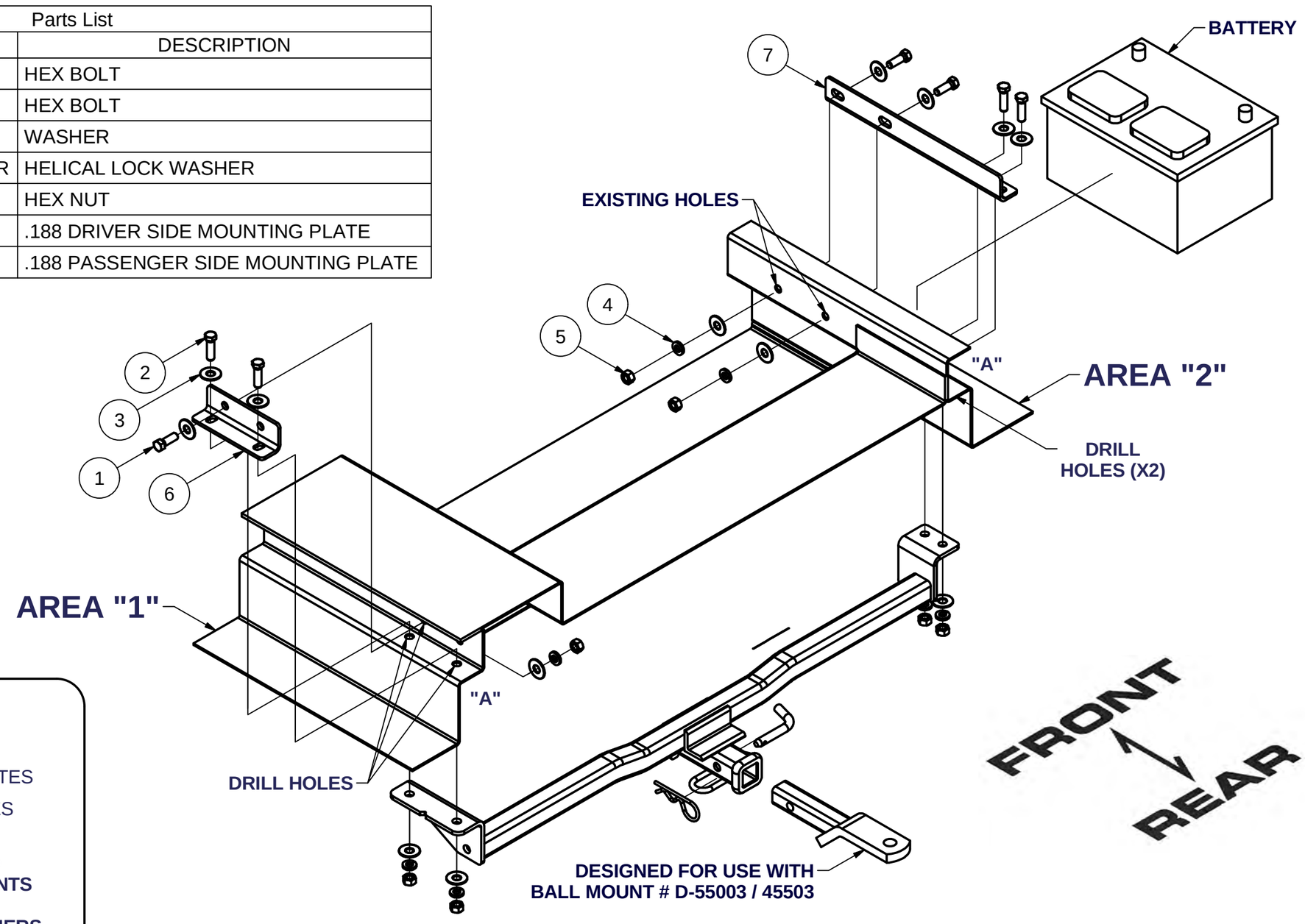

HITCH WEIGHT: 21 LBS.

INSTALL TIME

PROFESSIONAL: 60 MINUTES

NOVICE (DIY): 120 MINUTES

INSTALL NOTES:

- **REMOVE BATTERY AND CLEAR TRUNK CONTENTS**
- **DRILLING REQUIRED**
- **SILICONE SEAL FASTENERS**

INSTALLATION STEPS

1. Place the hitch just forward of the rear bumper and centered in the recess so the brackets have equal clearance front, back, and side-to-side. Mark the holes in the bracket on the passenger side, center punch and drill 1/8" pilot holes.

2. In the trunk remove or fold away the carpet in the main trunk area and the carpet in AREA "1", remove battery cover and battery from AREA "2" as well. Place mounting bracket (item #7) in the exposed channel, making sure to orient the bracket as shown. (Wide flange down and small slots rearward.)

3. Using the fasteners provided, attach the long mounting bracket (item #7) to the side of the trunk through the long slots and the existing holes in the trunk. Compare pilot holes with small slots and adjust as needed. Drill holes to fit 7/16" hardware and install fasteners as shown.

4. Adjust hitch to square with vehicle and drill mounting holes on the driver side for the 7/16 hardware. Place short mounting bracket (item #6) over the holes in AREA #1 that were just drilled and fasten hitch to vehicle through these holes and the short bracket with the fasteners provided.

5. Drill a hole for 7/16" bolt into the side of AREA #1 as shown. (If drilling from within AREA #1 is too difficult, center punch hole and drill from muffler recess under the vehicle.) Install fasteners through hole.

6. Tighten all 7/16" fasteners to 70 ft-lbs in reverse of these instructions.

7. Replace battery and all coverings to the original places.

PERIODICALLY CHECK THIS RECEIVER HITCH TO ENSURE THAT ALL FASTENERS ARE TIGHT AND THAT ALL STRUCTURAL COMPONENTS ARE SOUND.

Curt Manufacturing Inc., warrants this product to be free of defects in material and/or workmanship at the time of retail purchase by the original purchaser. If the product is found to be defective, Curt Manufacturing Inc., may repair or replace the product, at their option, when the product is returned, prepaid, with proof of purchase. Alteration to, misuse of, or improper installation of this product voids the warranty. Curt Manufacturing Inc.'s liability is limited to repair or replacement of products found to be defective, and specifically excludes liability for incidental or consequential loss or damage.