12025

1990-93 Chrysler Imperial, New Yorker Fifth Avenue
1988-93 Dodge Dynasty
1986-90 Chrysler New Yorker (Incl. Landau, Turbo Coupe)
1989-95 Dodge Spirit & Plymouth Acclaim
1989-94 Chrysler LeBaron 2 dr. & 4 dr.

11/19/2012

GROSS LOAD CAPACITY WHEN USED AS A WEIGHT CARRYING HITCH: 3,500 LBS. TRAILER WEIGHT & 350 LBS. TONGUE WEIGHT.

*****DO NOT EXCEED VEHICLE MANUFACTURER'S RECOMMENDED TOWING CAPACITY.*****

Parts List

ITEM	QTY	PART NUMBER	DESCRIPTION
1	1	3/8 - 16	HEX NUT
2	1	3/8 - 16 x 1 1/4	HEX BOLT
3	1	3/8"	LOCK WASHER
4	2	7/16-14	HEX FLANGE NUT
5	2	7/16-14 x 2	CARRIAGE BOLT
6	2	CM-SP11	.250 x 1.00 x 2.50" SQUARE HOLE SPACER
7	1	CM-SP43	.375 x 1.25 x 2.50" SQUARE HOLE SPACER
8	1	CM-438-FW	7/16 " FISHWIRE TOOL
9	1	CM-12025-EB	.250" EXHAUST HANGER BRACKET

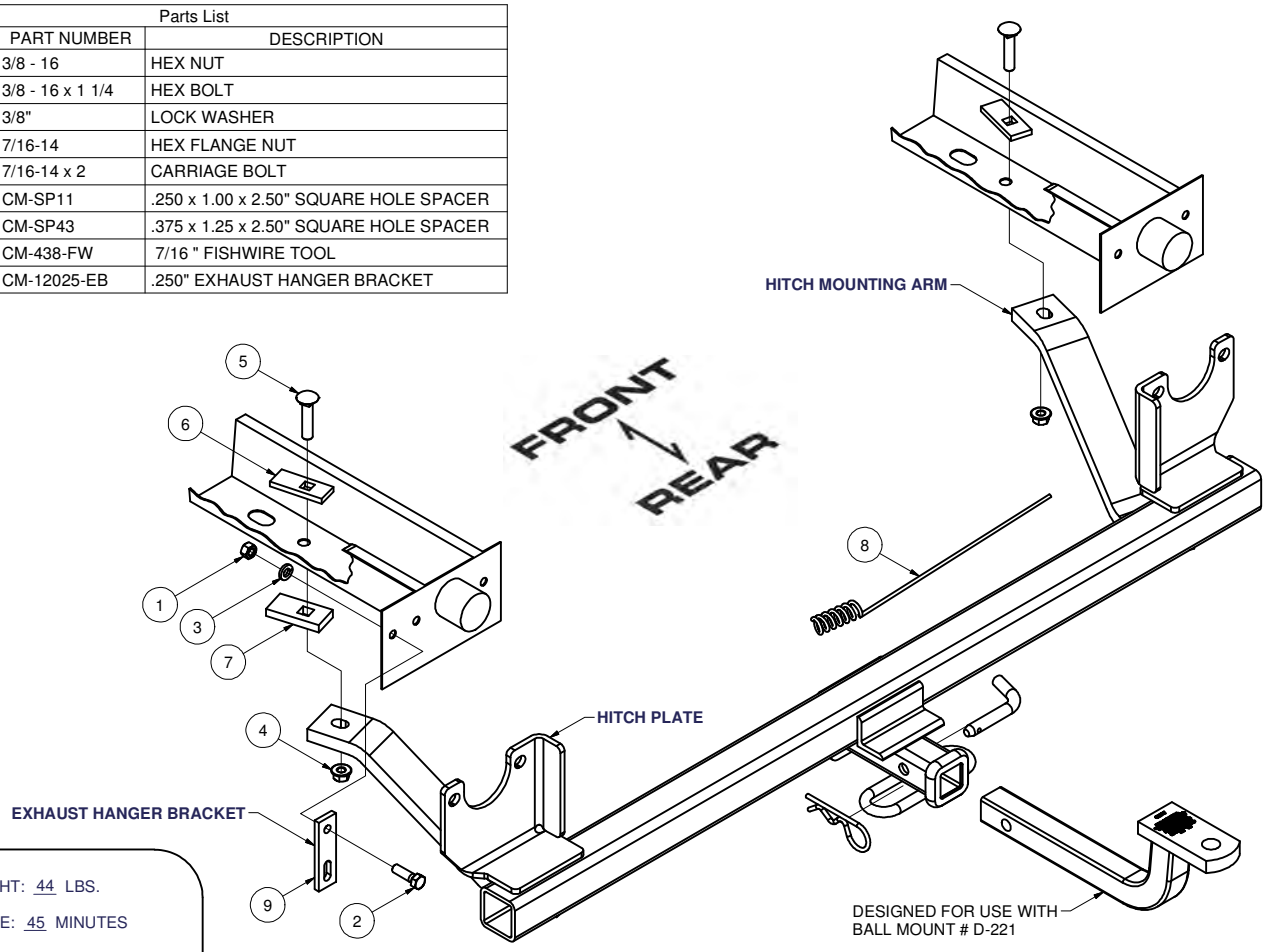

HITCH WEIGHT: 44 LBS.

INSTALL TIME: 45 MINUTES

INSTALL NOTES:
DRILLING REQUIRED
FISHWIRE INCLUDED

INSTALLATION STEPS

1. Locate and remove the two 8mm bolts which attach the bumper shock mount to the end of each vehicle frame. Save these bolts for later re-use. Remove the one 8mm bolt which attaches the muffler hanger bracket to the rear of the vehicle frame. Save this bolt for later re-use.

2. Insert a 7/16" carriage bolt and square hole spacer into each vehicle frame, through the access hole just forward of the hitch attachment hole. Use a fish wire to bring the bolt through the frame attachment hole.

3. Carefully position the hitch assembly up against the bumper shock mounts at the end of each vehicle frame and bolt loosely in place with the 8mm bolts previously removed in step 1. Push the mounting arms up against the bottom of the vehicle frame so that the previously installed carriage bolts, extending down through the frame, drop through the holes in the hitch mounting arms. Place a 3/8" thick spacer between the drivers side mounting arm and vehicle frame before bolting in place.

4. Attach the exhaust hanger bracket to the muffler hanger bracket using the 8mm bolt removed in step 1. Position the free end of the bracket up against the edge of the hitch on the end panel. Adjust the tailpipe to clear the hitch parts. Mark and drill a 3/8" diameter attachment hole in the vehicle end panel using the hole in the hanger bracket as a guide. Bolt the hanger bracket in place as shown.

5. Torque the 7/16" fasteners to 70 lb.-ft. Torque the 3/8" fasteners to 45 lb.-ft. Torque the 8mm bolts to 23 lb.-ft.

PERIODICALLY CHECK THIS RECEIVER HITCH TO ENSURE THAT ALL FASTENERS ARE TIGHT AND THAT ALL STRUCTURAL COMPONENTS ARE SOUND.

Curt Manufacturing Inc., warrants this product to be free of defects in material and/or workmanship at the time of retail purchase by the original purchaser. If the product is found to be defective, Curt Manufacturing Inc., may repair or replace the product, at their option, when the product is returned, prepaid, with proof of purchase. Alteration to, misuse of, or improper installation of this product voids the warranty. Curt Manufacturing Inc.'s liability is limited to repair or replacement of products found to be defective, and specifically excludes liability for incidental or consequential loss or damage.