12160 INSTALLATION INSTRUCTIONS

Safety glasses should be worn at all times while installing this product.

YEARS: 2016-PRESENT | MAKE: CADILLAC | MODEL: CT6 | STYLE: SEDAN

WARNING: NEVER EXCEED YOUR VEHICLE MANUFACTURER'S RECOMMENDED TOWING CAPACITY
For more information log onto www.curtmfg.com & for helpful towing tips log onto www.hitchinfo.com

WEIGHT CARRYING:

TRAILER WEIGHT: 3,500 LBS.
TONGUE WEIGHT: 350 LBS.

WARNING:
WE RECOMMEND THE USE OF 18050 STABILIZING STRAPS FOR ALL NON-TRAILER (WHEEL-LESS) LOADS. PLEASE SEE THE CURT CATALOG OR VISIT US ONLINE AT WWW.CURTMFG.COM FOR FURTHER INFORMATION.

PRO INSTALL TIME: 45 MIN.
NOVICE INSTALL TIME: 90 MIN.

IF YOU ARE HESITANT TO UNDERTAKE THIS TASK ON YOUR OWN, CONTACT AN AUTHORIZED CURT INSTALLER FOR ADDITIONAL ASSISTANCE.

INSTALLATION REQUIRES:

RATCHET

TORQUE WRENCH

8" SOCKET EXTENSION

T15 TORXBIT
T45 SOCKETS

7mm
8mm
10mm
13mm
SOCKETS

PRY BAR

AVIATION SHEARS

INSTALLATION TIPS:

1. BEFORE YOU BEGIN INSTALLATION, READ ALL INSTRUCTIONS THOROUGHLY.
2. TO EASE INSTALLATION, 2 PEOPLE MAY BE REQUIRED.
3. USING PROPER TOOLS WILL GREATLY IMPROVE THE QUALITY OF THE INSTALL AND REDUCE THE TIME REQUIRED.
4. NEED HELP OR HAVE SOME QUESTIONS? CALL TECHNICAL SUPPORT AT 800.798.0813

LEVEL OF DIFFICULTY: MODERATE

EASY | MODERATE | CHALLENGING

NO DRILLING REQUIRED

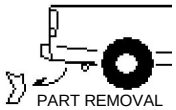

TEMPORARILY REMOVE BUMPER FASCIA

TRIM UNDERBODY PANEL

VEHICLE PHOTO:

REPRESENTATIVE PHOTO

HITCH ILLUSTRATION:

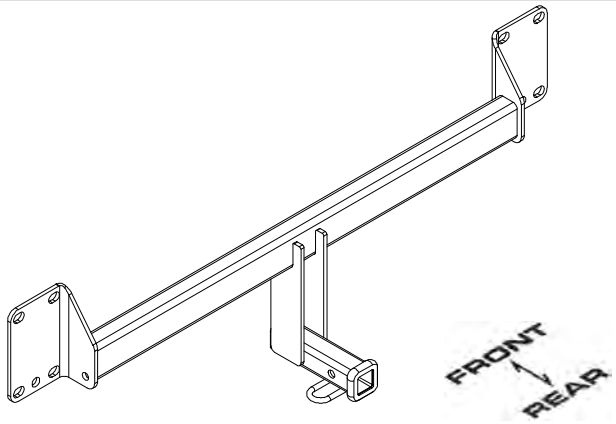

MAKE SURE YOUR HITCH MATCHES

SCAN FOR MORE INFO

PERIODICALLY CHECK THIS RECEIVER HITCH TO ENSURE ALL FASTENERS ARE TIGHT AND ALL STRUCTURAL COMPONENTS ARE SOUND

CURT Manufacturing LLC. warrants this product to be free of defects in material and/or workmanship at the time of retail purchase by the original purchaser. If the product is found to be defective, CURT Manufacturing LLC. may repair or replace the product at their option, when the product is returned, prepaid, with proof of purchase. Alteration to, misuse of, or improper installation of this product voids the warranty. CURT Manufacturing LLC.'s liability is limited to repair or replacement of products found to be defective, and specifically excludes liability for incidental or consequential loss or damage.

For more information log onto www.curtmfg.com , & for helpful towing tips log onto www.hitchinfo.com

This product complies with safety specifications and requirements for connecting devices and towing systems of the state of New York, V.E.S.C.Regulation V-5 and SAE J684.

5/13/2016

INSTALLATION WALKTHROUGH:

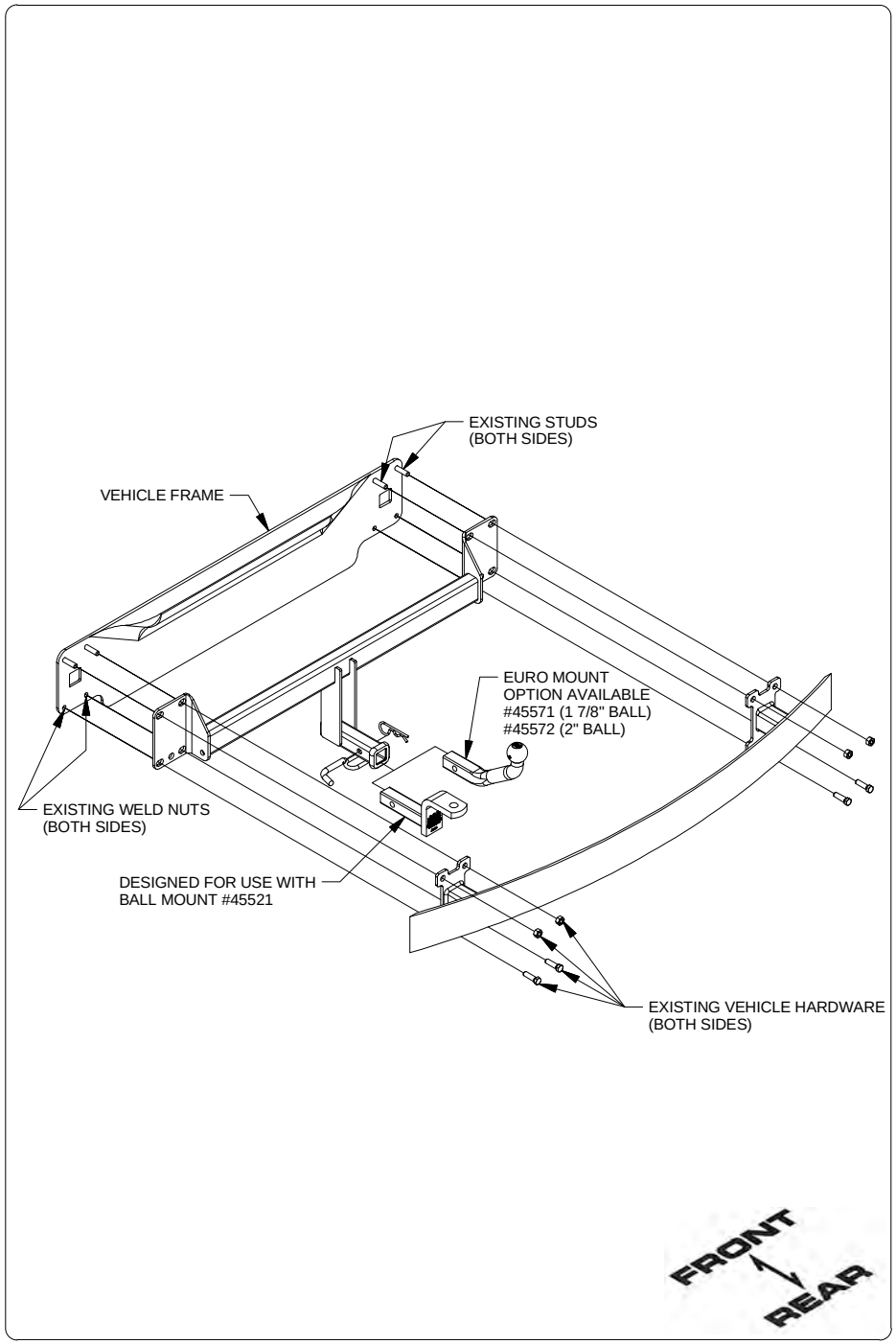

1. Remove underbody panel by removing (3) nuts using a 10mm socket and remove (12) screws along outer edge of fascia using T-15 Torxbit Socket. Set underbody panel aside for trim and reinstallation.

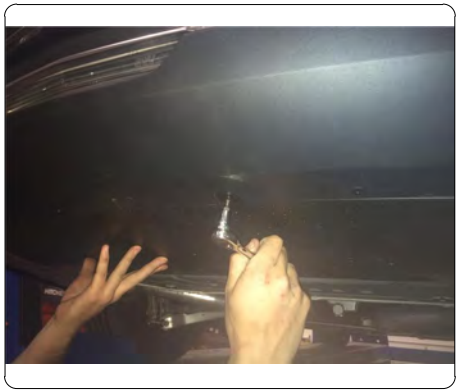

2. Pull back wheel well cover to remove (4) screws (2) on each side using 7mm socket.

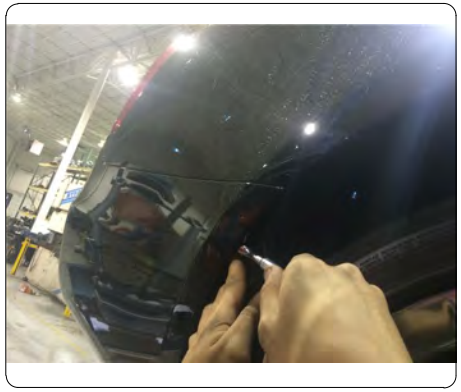

INSTALLATION WALKTHROUGH:

3. Inside the trunk along the plastic liner guard use plastic pry bar to remove (2) caps, (1) on each side, to access and remove (2) bolts, (1) on each side, using T-45 Torxbit Socket. Gently remove plastic trunk liner guard and set aside for reinstallation.

4. To access taillight removal, remove (4) plastic clips, (2) on each side. To remove taillights, pull back trunk carpet locate and remove (8) nuts using 8mm socket, (4) on each side. Unclip electrical harness and gently remove taillight, set aside for reinstallation.

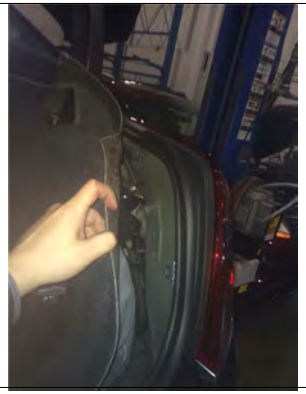

5. Gently remove rear bumper fascia by releasing the press-in tabs along top portion of bumper fascia. Unclip motion sensor harness. Set aside for reinstallation.

6. Remove the bumper beam by removing (2) nuts and (2) bolts using 13mm socket, on each side. Set aside bumper beam for reinstallation.

For more information log onto www.curtmfg.com, & for helpful towing tips log onto www.hitchinfo.com

INSTALLATION WALKTHROUGH:

7. Install hitch on rear of vehicle frame using existing studs. Reinstall bumper beam over hitch. Loosely secure with existing vehicle hardware.

8. Torque all M10 hardware to 45 ft-lbs.

9. Trim underbody panel as shown in the trim diagram using aviation shears.
NOTE: All dimensions are approximate, confirm fit prior to trim.
NOTE: Removing (2) corner crush tabs (1) on each side of fascia may ease installation.

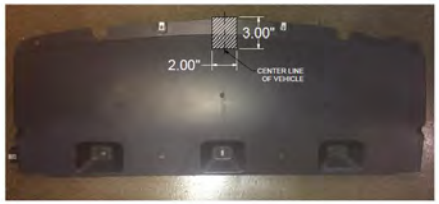

UNDERBODY PANEL TRIM DIAGRAM

10. Reinstall rear bumper fascia removed in step 5. Reinstall taillights removed in step 4. Reinstall trunk liner guard removed in step 3. Reinstall underbody panel removed in step 1. Reinstall all fasteners removed.

Installation complete.

TOWING SAFETY INFORMATION

Gross Trailer Weight / GTW

The Gross Trailer Weight is the weight of the trailer & cargo.
Measure this by putting the fully loaded trailer on a vehicle scale.

Tongue Weight / TW

The downward force that is exerted on the hitch ball by the coupler. The tongue weight will vary depending on where the load is positioned in relationship to the trailer axle(s). To measure the tongue weight, use either a commercial scale or a bathroom scale with the coupler at towing height. When using a bathroom scale with heavier tongue weights, use the method shown and multiply the scale reading by 3.

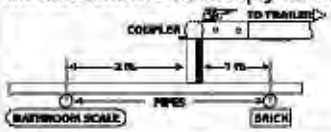

Weight Carrying / WC

The total weight of both the trailer and the cargo inside.
Never exceed the weight capacity of your trailer hitch.

Weight Distribution / WD

Used to balance the weight of the cargo between the front and rear wheels throughout the trailer, allowing for better steering, braking, and level riding.

Sway Control

A device used to reduce the lateral movements of the trailer that are caused by the wind. This works in conjunction with a weight distribution hitch. Do not use this on a class 1 or 2 hitch, or with surge brakes.

How Much Can You Safely Tow?

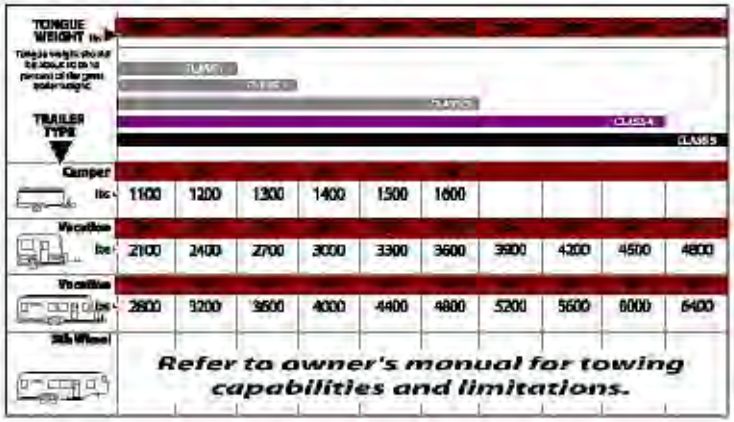

Ball Mount

The ball mount is placed inside the opening of the receiver hitch which is mounted to the vehicle. Make sure a hitch pin and clip is properly securing the ball mount to the receiver hitch before you begin towing.

- A: Rise. B: Drop. C: Hole Size. D: Length.

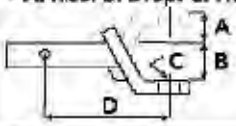

Trailer Ball

The connection from the hitch to the trailer. There are many factors that determine the correct hitch ball:

- Number one is the hitch ball's gross trailer weight rating.
- The mounting platform must be at least 3/8" thick.
- The hole diameter must not be more than 1/16" larger than the threaded shank.
- Every time you tow, check the nut and lock washer to make sure they are fastened securely.
- A: Ball Dia. B: Shank Length. C: Shank Dia. D: Shank Rise.

Coupler

The component that is placed over the trailer ball to connect the vehicle to the trailer. Be sure that the coupler size matches the size of the hitch ball and that the coupler handle is securely fastened. To determine what size hitch ball you need for your application you will need to know the size of coupler that is on the trailer. Be sure your coupler is properly adjusted to the ball you are using.
NOTE: For added security the use of safety devices such as Coupler Safety Pins and Locks is strongly recommended.

Safety Chains

Safety chains are a requirement and should be crossed under the tongue of the trailer so that the tongue will not drop to the road if it becomes separated from the hitch. Always leave enough slack so you can turn. Never allow the safety chains to drag on the ground and never attach the chains to the bumper.
Trailer Classification: Safety Chain Breaking Force - Minimum
Class 1: 2,000 lbs. (8.9 kN)
Class 2: 3,500 lbs. (15.6 kN)
Class 3: 5,000 lbs. (22.2 kN)
The strength rating of each length of safety chain or its equivalent and its attachments shall be equal to or exceed in minimum breaking force the GVWR (Gross Vehicle Weight Rating) of the trailer.

Electrical

Trailer lights, Electric Brakes, Break-away systems - Every time you tow, be sure to check that all components are working properly.
Wiring identification by color:

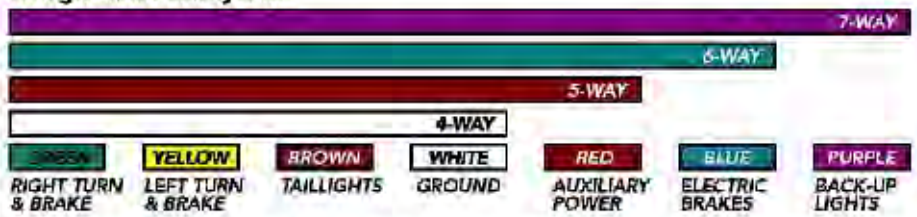

CURT DISCLAIMER: WIRING COLOR SHOWN WORK IN CONJUNCTION WITH CURT MANUFACTURING PRODUCTS.

12160 CADILLAC CT6

5/12/2016

GROSS LOAD CAPACITY WHEN USED AS A WEIGHT CARRYING HITCH: 3,500 LBS. TRAILER WEIGHT & 350 LBS. TONGUE WEIGHT.

WARNING: *** DO NOT EXCEED VEHICLE MANUFACTURER'S RECOMMENDED TOWING CAPACITY. ***

FOR MORE INFORMATION LOG ONTO WWW.CURTMFG.COM & FOR HELPFUL TOWING TIPS LOG ONTO WWW.HITCHINFO.COM
HAVING INSTALLATION QUESTIONS? CALL TECHNICAL SUPPORT AT 1-800-798-0813

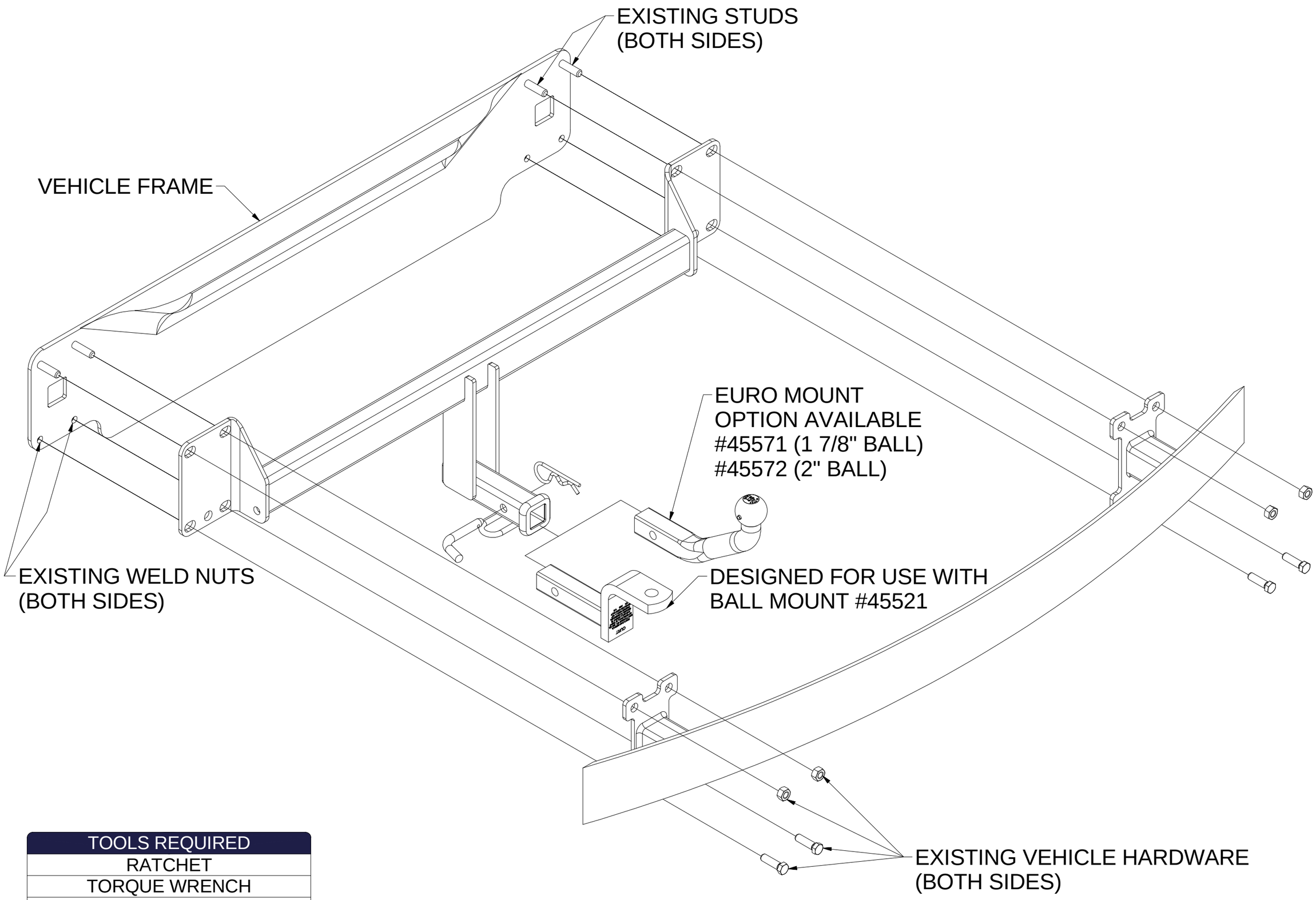

TOOLS REQUIRED
RATCHET
TORQUE WRENCH
8" EXTENSION
T15 TORXBIT SOCKET
T45 TORXBIT SOCKET
7mm SOCKET
8mm SOCKET
10mm SOCKET
13mm SOCKET
PLASTIC PRY BAR
AVIATION SHEARS

HITCH WEIGHT: 23 LBS.

INSTALL TIME

PROFESSIONAL: 45 MINUTES

NOVICE (DIY): 90 MINUTES

INSTALL NOTES:
- NO DRILLING REQUIRED
- USE EXISTING HARDWARE
- BUMPER FASCIA REMOVAL
- UNDERBODY PANEL TRIM

PERIODICALLY CHECK THIS RECEIVER HITCH TO ENSURE THAT ALL FASTENERS ARE TIGHT AND THAT ALL STRUCTURAL COMPONENTS ARE SOUND.

Scan for more information

CURT Manufacturing LLC., warrants this product to be free of defects in material and/or workmanship at the time of retail purchase by the original purchaser. If the product is found to be defective, CURT Manufacturing LLC., may repair or replace the product, at their option, when the product is returned, prepaid, with proof of purchase. Alteration to, misuse of, or improper installation of this product voids the warranty. CURT Manufacturing LLC.'s liability is limited to repair or replacement of products found to be defective, and specifically excludes liability for incidental or consequential loss or damage.

This product complies with safety specifications and requirements for connecting devices and towing systems of the state of New York, V.E.S.C.Regulation V-5 and SAE J684.

HAVING INSTALLATION QUESTIONS? CALL TECHNICAL SUPPORT AT 1-800-798-0813

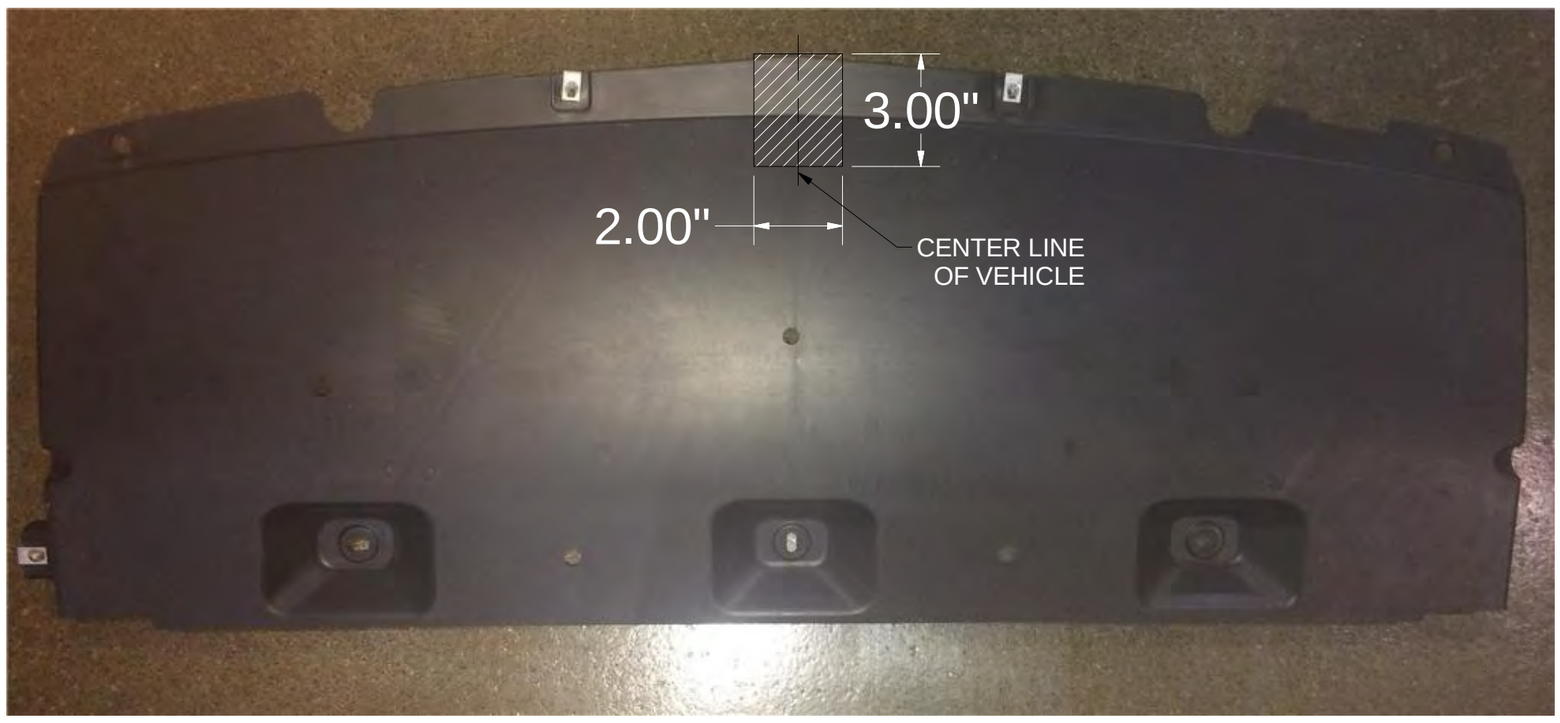

UNDERBODY PANEL TRIM DIAGRAM

INSTALLATION STEPS

1. Remove underbody panel by removing (3) nuts using a 10mm socket and remove (12) screws along outer edge of fascia using T-15 Torxbit Socket. Set underbody panel aside for trim and reinstallation.

2. Pull back wheel well cover to remove (4) screws (2) on each side using 7mm socket.

3. Inside the trunk along the plastic liner guard use plastic pry bar to remove (2) caps, (1) on each side, to access and remove (2) bolts, (1) on each side, using T-45 Torxbit Socket. Gently remove plastic trunk liner guard and set aside for reinstallation.

4. To access taillight removal, remove (4) plastic clips, (2) on each side. To remove taillights, pull back trunk carpet locate and remove (8) nuts using 8mm socket, (4) on each side. Unclip electrical harness and gently remove taillight, set aside for reinstallation.

5. Gently remove rear bumper fascia by releasing the press-in tabs along top portion of bumper fascia. Unclip motion sensor harness. Set aside for reinstallation.

6. Remove the bumper beam by removing (2) nuts and (2) bolts using 13mm socket, on each side. Set aside bumper beam for reinstallation.

7. Install hitch on rear of vehicle frame using existing studs. Reinstall bumper beam over hitch. Loosely secure with existing vehicle hardware.

8. Torque all M10 hardware to 45 ft-lbs.

9. Trim underbody panel as shown in the trim diagram using aviation shears.
   NOTE: All dimensions are approximate, confirm fit prior to trim.
   NOTE: Removing (2) corner crush tabs (1) on each side of fascia may ease installation.

10. Reinstall rear bumper fascia removed in step 5. Reinstall taillights removed in step 4. Reinstall trunk liner guard removed in step 3. Reinstall underbody panel removed in step 1. Reinstall all fasteners removed.

    Installation complete.

PERIODICALLY CHECK THIS RECEIVER HITCH TO ENSURE THAT ALL FASTENERS ARE TIGHT AND THAT ALL STRUCTURAL COMPONENTS ARE SOUND.

CURT Manufacturing LLC., warrants this product to be free of defects in material and/or workmanship at the time of retail purchase by the original purchaser. If the product is found to be defective, CURT Manufacturing LLC., may repair or replace the product, at their option, when the product is returned, prepaid, with proof of purchase. Alteration to, misuse of, or improper installation of this product voids the warranty. CURT Manufacturing LLC.'s liability is limited to repair or replacement of products found to be defective, and specifically excludes liability for incidental or consequential loss or damage.