12221 PONTIAC VIBE AND TOYOTA MATRIX ALL MODELS

7/12/2012 (NOTE: TOYOTA MATRIX XR AND XRS LOWER VALANCE MAY REQUIRE MINOR TRIMMING.)

GROSS LOAD CAPACITY WHEN USED AS A WEIGHT CARRYING HITCH: 2,500 LBS. TRAILER WEIGHT & 250 LBS. TONGUE WEIGHT.

*****DO NOT EXCEED VEHICLE MANUFACTURER'S RECOMMENDED TOWING CAPACITY.*****

WARNING: ALL NON-TRAILER LOADS APPLIED TO THIS PRODUCT MUST BE SUPPORTED BY AUXILIARY STABILIZING STRAPS.

**** FAILURE TO PROPERLY SUPPORT NON-TRAILER LOADS WILL VOID PRODUCT WARRANTY****

HAVING INSTALLATION QUESTIONS? CALL TECHNICAL SUPPORT AT 1-800-798-0813

Parts List			
ITEM	QTY	PART NUMBER	DESCRIPTION
1	4	1/2"	CONICAL TOOTHED WASHER
2	4	M12-1.25 x 30mm	HEX BOLT

TOOLS REQUIRED
RATCHET
10" EXTENSION
19mm SOCKET
TORQUE WRENCH

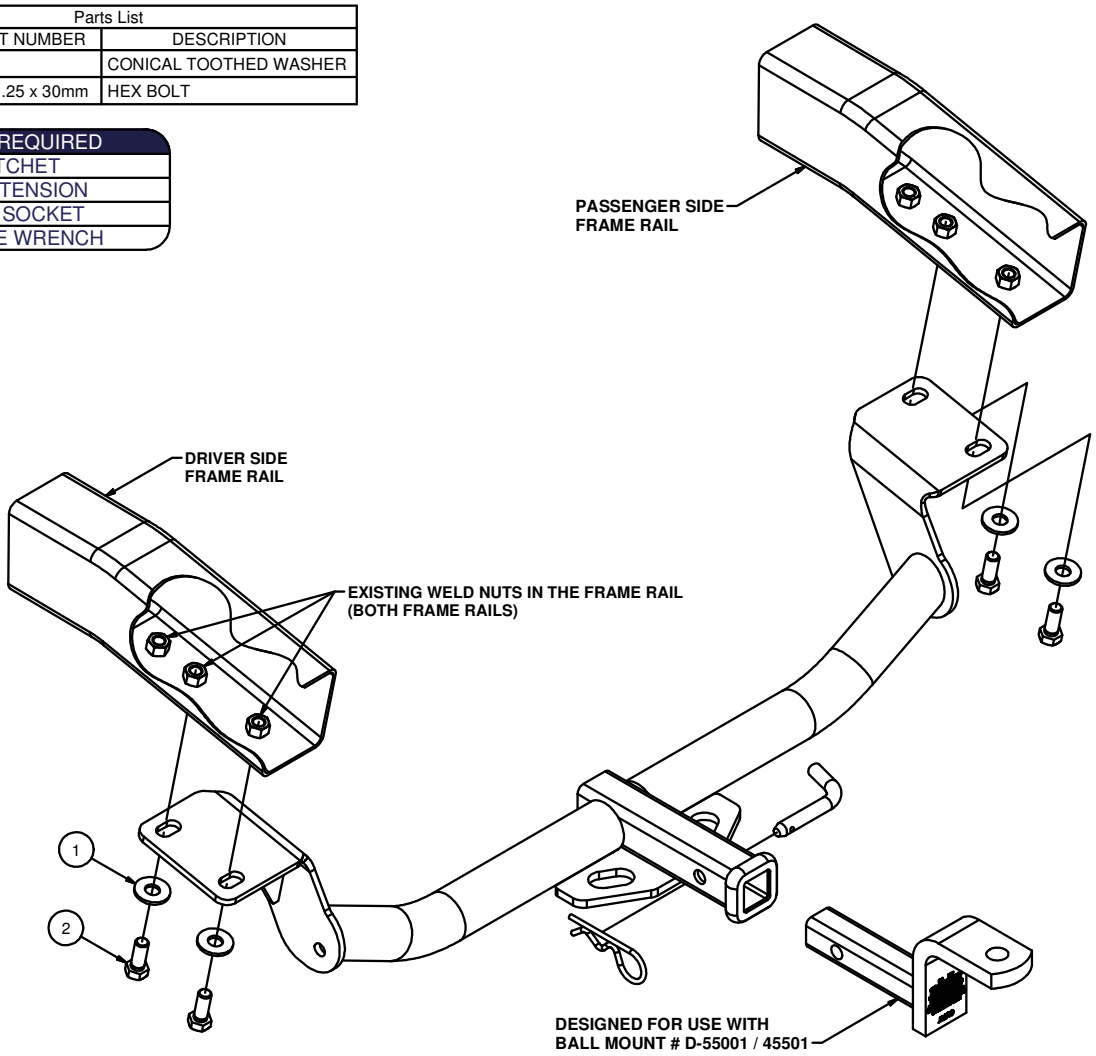

HITCH WEIGHT: 21 LBS.

INSTALL TIME

PROFESSIONAL: 15 MINUTES

NOVICE (DIY): 30 MINUTES

INSTALL NOTES:

- NO DRILLING REQUIRED
- HEAT SHIELD MODIFICATION MAY BE REQUIRED

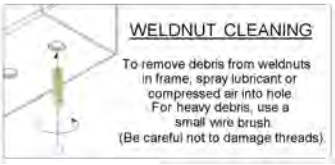

INSTALLATION STEPS

1) **Raise hitch into position over the exhaust. Align the slots in the hitch with the weldnuts in the frame rails closest to the rear end of the vehicle.**
2) **Install hex bolts and conical toothed washers into weldnuts.**
3) **Torque bolts to 86 lb-ft.**

PERIODICALLY CHECK THIS RECEIVER HITCH TO ENSURE THAT ALL FASTENERS ARE TIGHT AND THAT ALL STRUCTURAL COMPONENTS ARE SOUND.

Curt Manufacturing Inc., warrants this product to be free of defects in material and/or workmanship at the time of retail purchase by the original purchaser. If the product is found to be defective, Curt Manufacturing Inc., may repair or replace the product, at their option, when the product is returned, prepaid, with proof of purchase. Alteration to, misuse of, or improper installation of this product voids the warranty. Curt Manufacturing Inc.'s liability is limited to repair or replacement of products found to be defective, and specifically excludes liability for incidental or consequential loss or damage.