DEFLECTA-SHIELD
ALUMINUM PRODUCTS

LUND International™

RUNNING BOARDS

EX-202 & EX-202B
202

FORD 138" WHEELBASE VAN

Installation Instructions
Please read carefully and completely.

7225 N. State Rd. 9
Howe, Indiana. 46746
Phone # 1-800-334-4447 Fax # 1-800-368-4341

6-26-03

10307

Section A
Bracket installation

1. Measure back from the front of the pinch weld for the front and center vertical brackets. Use the measurements below and mark the pinch weld for hole locations. The pinch weld is a seam running from the front to rear wheel opening along the bottom of the vehicle where the body side panel is spot welded to the inner rocker panel.
2. Drill a 9/32" hole through the pinch weld at each location.
3. Use the 757 bracket for the driver's side and passenger side front location and for the passenger side center location. The front bracket locations will use a spacer between the pinch weld and the bracket. Fasten brackets with a 1/4" carriage bolt, spacer and nut. Push the bracket up tight to the floor then install a #14 sheet metal screw thru the hole in the top of the bracket and into the floor. Do not over tighten the screw. See figure A.
4. For the passenger side center location install a 902 support angle to the top of the 757 bracket with a 1/4" carriage bolt and nut. Set the bracket the same distance down past the pinch weld as the front bracket and secure with a 1/4" carriage bolt, nut and a # 14 sheet metal screw. See figure B.
5. Use the 794 bracket for the center location on the driver side. See figure C.

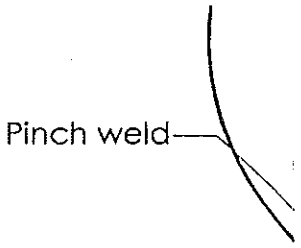

Figure A
Front Brackets

Figure B
Center Pass Side

Section B
Running board setup

CAUTION Care must be taken not to scratch stone guard on sharp objects.

1. Install two square head bolts in each track on the underside of the running board.
2. Install a stone guard on each end of the board using the 3/8" x 1" bolts. Thread the bolts through the holes and then into the track, the bolts will cut their own threads in the track, do not over tighten these bolts.
3. Bolt the horizontal channels to the bottom of boards using the square head bolts already placed in the track with 1/4" nuts. Do not tighten at this time, leave loose enough to be able to slide the channel.

Section C
Installing the boards to the vehicle.

1. If the vehicle has flares, check to see if there is enough clearance for the board, trim with a utility knife if necessary.
2. Position the board on the vehicle with the stone guard tight to the wheel well, **(CAUTION do not slide the stone guard across the screw heads inside the wheel well as this will scratch them);** use locking pliers to hold it in place by clamping the channels to the vertical brackets.
3. Bolt the channels to the vertical brackets with 5/16"x 3/4" bolts and 5/16" nuts. Do not tighten these bolts at this time. Leave finger tight.
4. Set the board level with the vehicle and make sure that the stone guard is tight to the wheel well. Also check the board to see if it is parallel with the pinch weld, now tighten the bolts. Tighten the bolts holding the channels to the board first, then the bolts holding the channels to the vertical brackets.

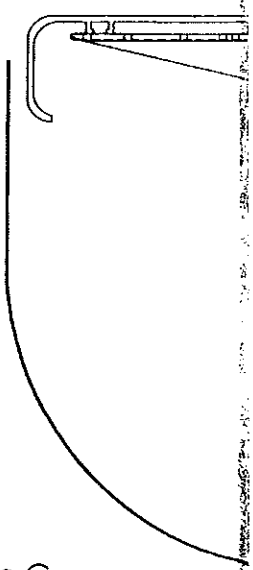

Figure C
Driver side center

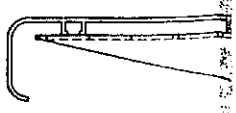

Bracket locations		
	Front	Center
Drivers side	8"	50 1/2"
Passenger side	8"	50 1/2"

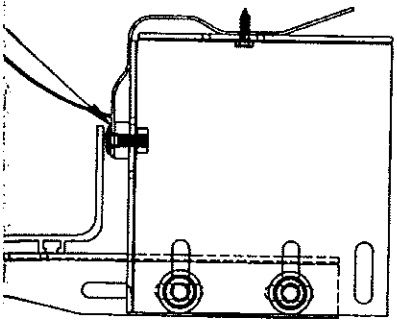

Section D
Diamond running boards.

1. The brackets are installed the same way for diamond boards as they are for the extruded, see section A.
2. Bend the stone guard to fit the wheel well keeping the diamond side up.
3. The stone guards are mounted to the end of the board that has the diamonds on the inside of the welded end cap, they are fastened to the running board with 1/4" carriage bolts.
4. Install the channels to the vertical brackets first then position the board the same way you do for the extruded boards, see section C.
5. Drill up from the bottom through the holes in the channels then bolt through from the top down with carriage bolts.
6. Tighten all the fasteners.

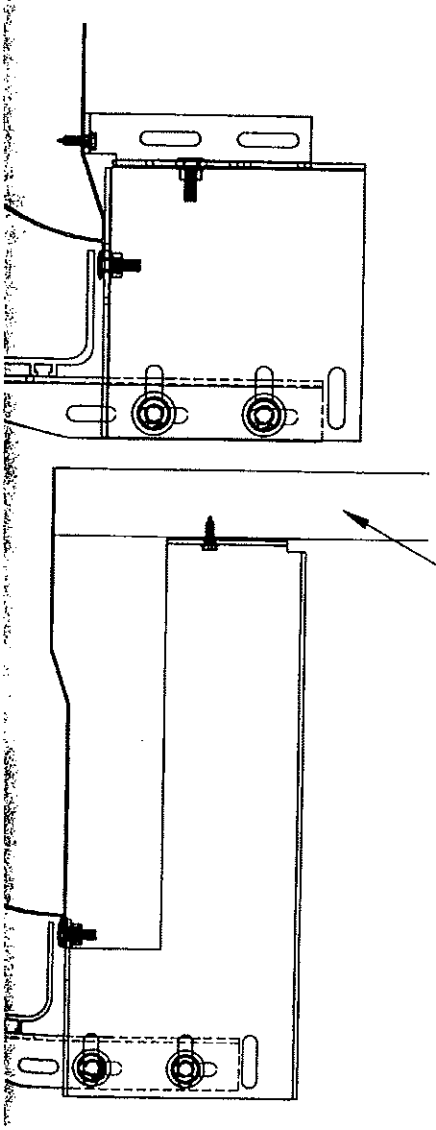

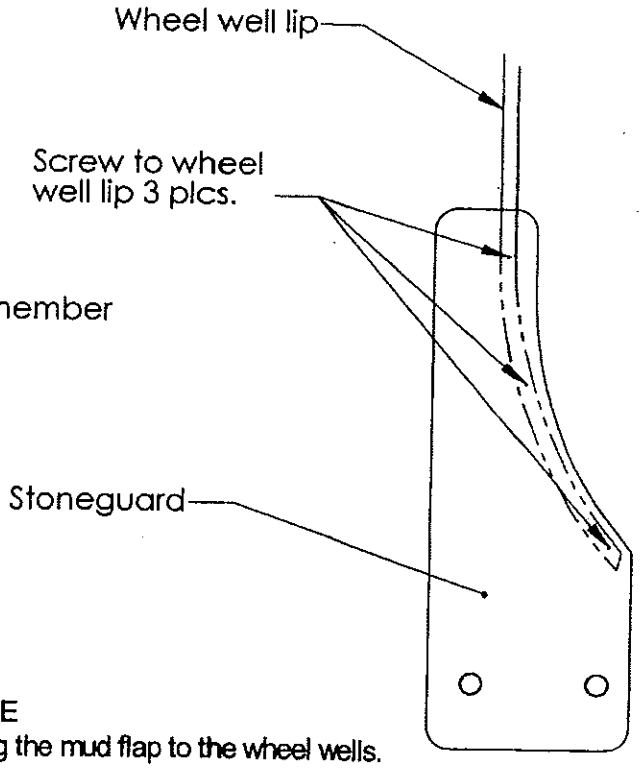

Section E
Securing the mud flap to the wheel wells.

Starting at the bottom and drill a 1/8" hole in three places through the mud flap and the wheel well. Drill and secure each location with a # 8 sheet metal screw before drilling next location.

RUNNING BOARDS				
PART #	DESCRIPTION	EX-202	EX-202B	202
DEM-12-102	102" BOARD	2		
DEM-12-102B	102" BLACK BOARD		2	
320-104	102" BOARD			2
EX-1065D/b	STONE GUARD		2	
EX-1065P/b	STONE GUARD		2	
EX-1065D	STONE GUARD	2		
EX-1065P	STONE GUARD	2		
W-1065D	STONE GUARD			2
W-1065P	STONE GUARD			2
757	VERTICAL BRACKET	3	3	3
794	VERTICAL BRACKET	1	1	1
902	SUPPORT ANGLE	1	1	1
648	CHANNEL	4	4	4
1125	BOLT PACK	2		2
1125B	BOLT PACK		2	
1132	SPACER PACK	1	1	1
1098	BOLT PACK STONE GUARD	1		
1098B	BOLT PACK STONE GUARD		1	
1090	BOLT PACK STONE GUARD			1

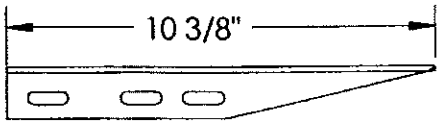

648

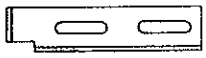

902

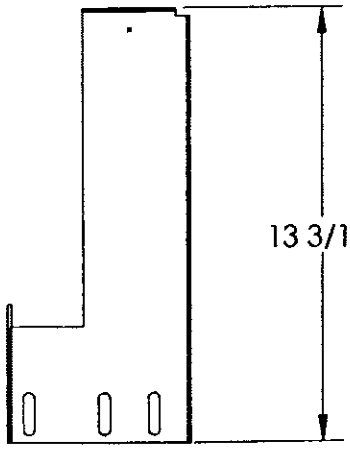

794

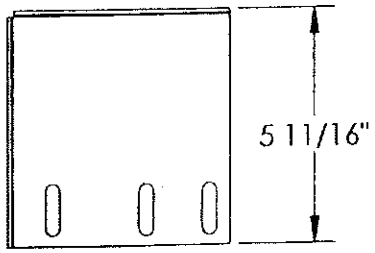

757