TRAILBACK RUNNING BOARDS					
PART #	DESCRIPTION	MX-101	MX-101B	MX-120	MX-120B
DEM-131-164	96 3/4" BOARD	2			
DEM-131-164B	96 3/4" BOARD		2		
DEM-131-164	116 3/4" BOARD			2	
DEM-131-164B	116 3/4" BOARD				2
8130R	SPLASH GUARD	2	2	2	2
8130L	SPLASH GUARD	2	2	2	2
M-20000-3	VERTICAL BRACKET	2	2	2	2
M-20000-4	VERTICAL BRACKET	2	2	1	1
M-20000-6	ANGLE BRACKET	6	6	6	6
793XA	VERTICAL BRACKET	2	2	3	3
648	CHANNEL	6	6	6	6
1116	BOLT PACK	1	1	1	1
1117	BOLT PACK	3	3	3	3

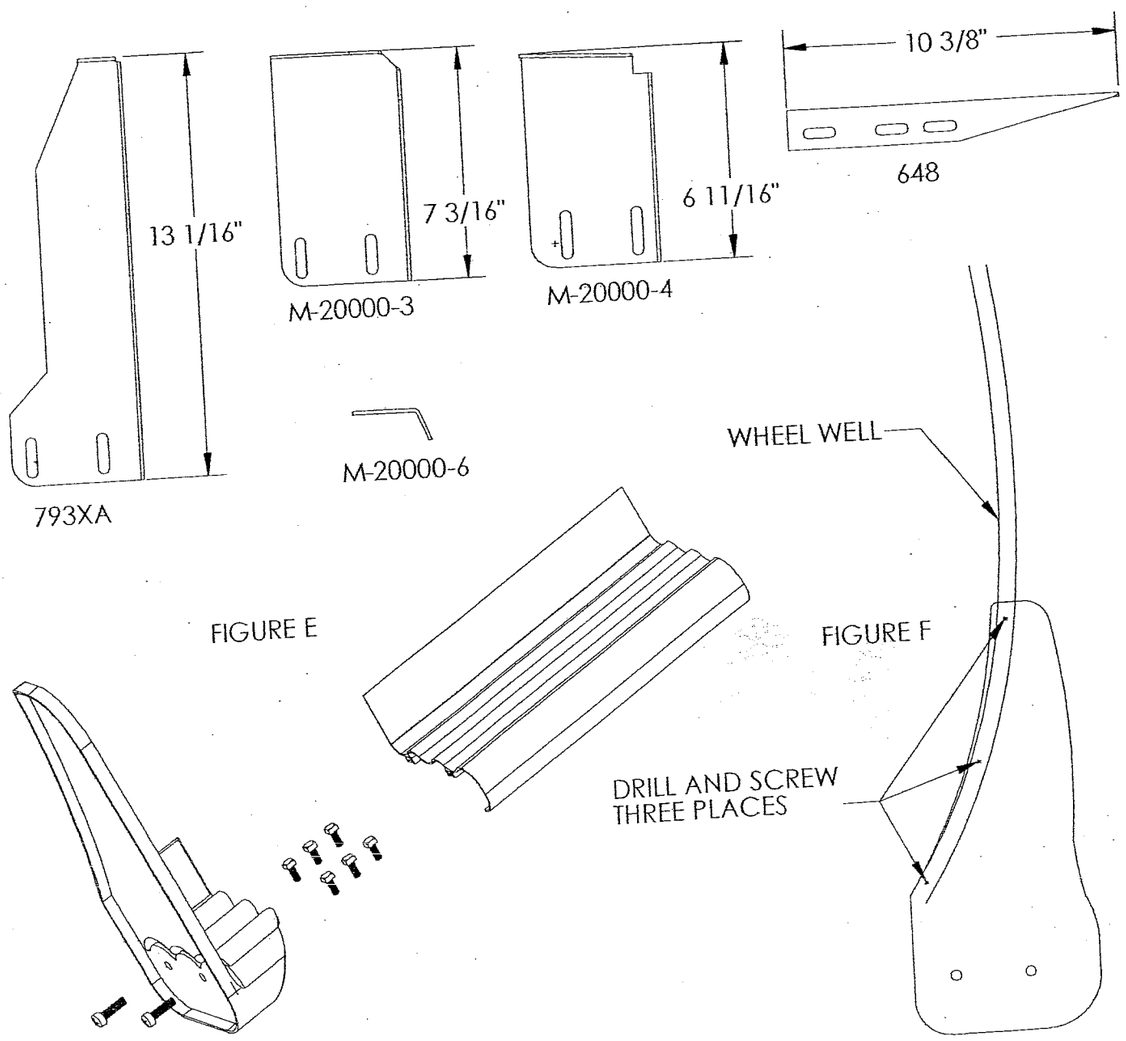

DEFLECTA-SHIELD®
ALUMINUM PRODUCTS

© 2003 Lund International, Inc. All rights reserved.
Deflecta-Shield and the Deflecta-Shield logo are
Trademarks of Lund International, Inc.

TRAILBACK™

RUNNING BOARDS
MX-101 MX-101B
MX-120 MX-120B

Chevrolet Express & GMC Savana Van

Installation Instructions
Please read carefully and completely.

7225 N. State Rd. 9
Howe, Indiana. 46746
Phone # 1-800-334-4447 Fax # 1-800-368-4341

10320

LUND INTERNATIONAL

PART 1

STEP 1

- Read entire instructions carefully before installing running boards.
- Running boards will install easier if you are able to lift the van.

STEP 2

- Use figure A to show where to mark the pinch weld for hole locations for street side and figure B for curbside. Hook tape measure on the bottom edge of the front inner fender. See figure C. The pinch weld is a seam running from the front to rear wheel opening where the body side panel is spot welded to the floor pan. Using an 11/32" drill bit, drill the hole 5/16" up from lower edge of pinch weld. See figure D. Drill one hole at each location. Note: using a center punch to dimple the hole location prior to drill hole will help stop the drill bit from moving.

STEP 3

- Slide three 1/4"-20 square head bolts into each track of the running board, spacing them so there is one at each end and one in the middle. See figure E.
- Place one splashguard on each end of running board see figure E. Fasten the splashguard to the running board with two 5/16"-18 fillister bolts as shown in figure E. Fillister bolts will go through the holes in the splashguard and into the track of the running board. Torque the Fillister bolts to 15 to 17 in. lbs.

PART 2

STEP 1

- Install a 5/16"-18 hex bolt from the bottom up through the hole in pinch weld. Install long leg of M-20000-6 bracket over 5/16"-18 hex bolt in pinch weld. See figure D. Bracket M-20000-6 goes on top of the pinch weld.
- Install a 5/16"-18 hex bolt into the hole in the short leg of the M-20000-6 bracket. See figure D.
- Square the M-20000-6 bracket up with the pinch weld and install a 5/16"-18 hex nut and tighten to 15 to 17 ft. lbs. Do this at all hole locations in the pinch weld.

STEP 2

- At the front bracket location fasten one M-20000-3 bracket to the M-20000-6 bracket as shown in the typical bracket assembly. Install a 5/16"-18 hex nut on the existing 5/16"-18 x 1" hex bolt. Only finger tighten at this time.
- Slide the M-20000-3 bracket up until it makes contact with the floor under the front door.
- While holding the M-20000-3 bracket vertical and square to the pinch weld install a #14x1" self-taping screw through the hole in the top of the M-20000-3 bracket and into the floor. Torque screws to15-18 in. lbs.
- Now tighten the 5/16' fasteners that hold the M-20000-3 bracket to the M-20000-6 bracket. Torque nuts to15 to 17 ft. lbs.
- Installation for the other brackets will be the similar. See figure A and B for bracket number and position. The 793XA brackets will be fastened to the bottom of a cross member instead of the floor. All other brackets will fasten to the floor.

Figure A

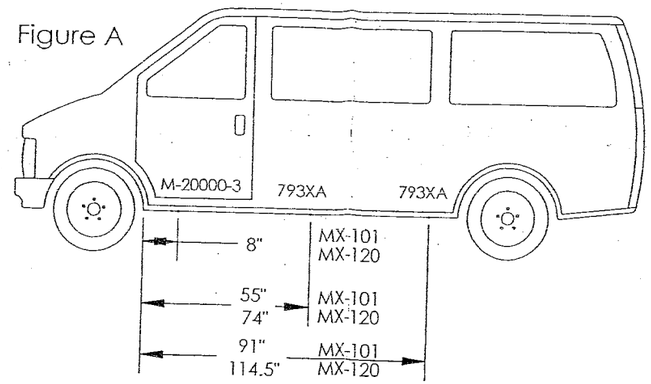

Figure B

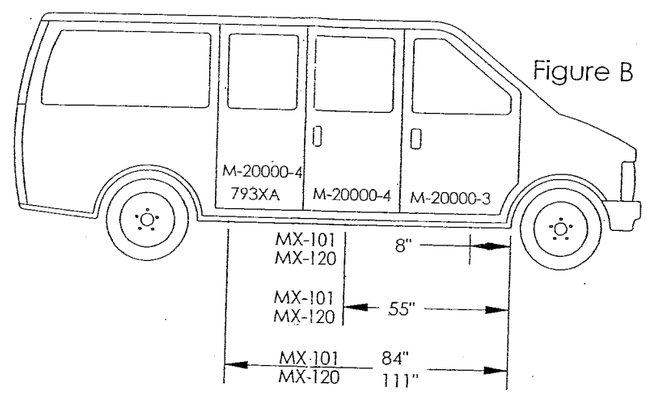

Typical bracket assembly

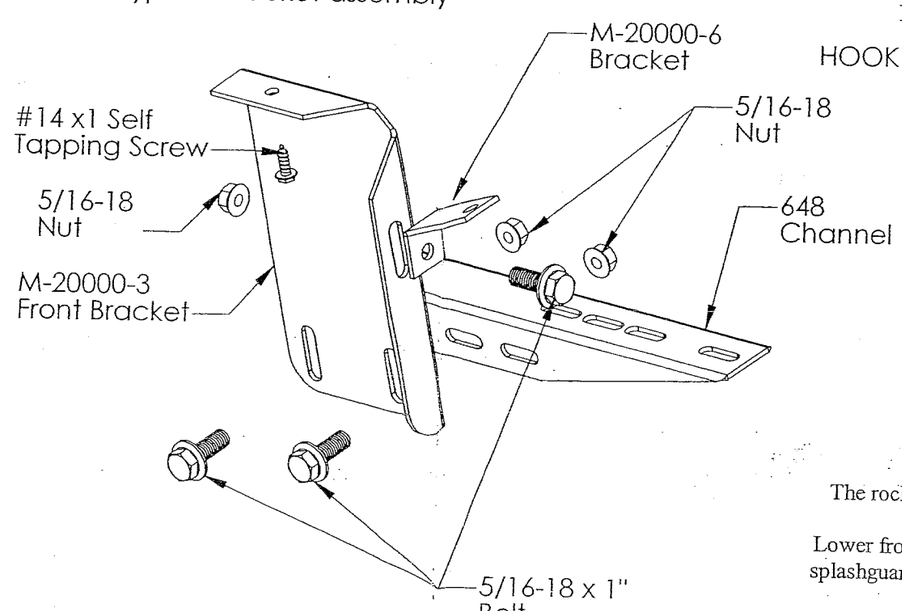

PART 3

STEP 1

- Slide the 1/4"-20 square head bolts so that they are on the flat side of the vertical brackets.
- Install a 648 channel to the bottom of the running board using the 1/4"-20 square head bolts that you installed earlier. Holding the 648 channel on the 1/4"-20 square bolts install a 1/4"-20 hex nut on the 1/4"-20 square bolts. Just finger tighten for now.
- Do this at all bracket locations.
- Now slide the 648 channel up against the flat side of the vertical bracket.
- Install 5/16"-18 hex bolts through the slots in the vertical bracket and in to the 648 bracket. Install 5/16"-18 hex nuts on to the 5/16"-18 hex bolts. Finger tighten at this time.
- Using a level, level the running board. (Note: place level at bracket locations of running board.)
- When running board is level tighten the 5/16" fasteners that hold the vertical brackets and the 648 channels together and the 1/4" nuts holding the running board to the channels.
- Torque 1/4" nuts to 5 ft. lbs.
- Torque 5/16" nuts to 15 to 17 ft. lbs.

PART 4

STEP 1

- Holding the splashguard against the wheel opening lip drill a 1/8" hole towards the bottom of the splash guard and wheel opening lip. **Careful the front wheel opening extension is fiberglass.**
- Install a # 8 x 1" screw through the hole you just drilled. Do not over tighten these screws. Torque these screws to 12 in. lbs.
- Repeat this step at the other two locations shown in figure F. This step will need to be done for all wheel-opening lips.
- At this time you are finished with your installation.

Figure C

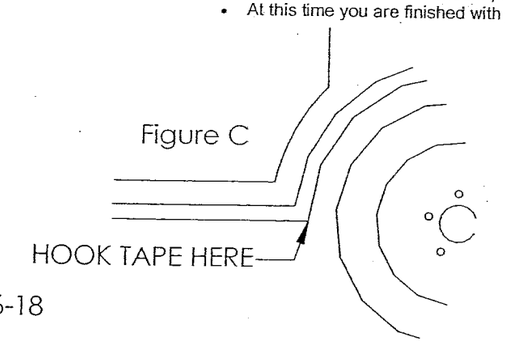

Figure D

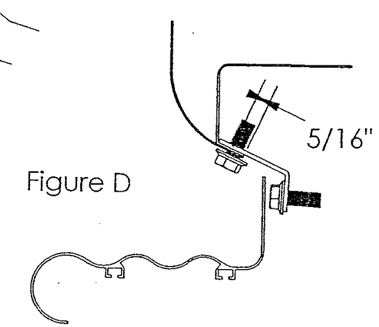

NOTE: These are body-mount running boards.
The rocker panel pinch weld supports the running board, the splashguards **DO NOT.**

Caution:

Lower front fender extension is made of fiberglass. Use extreme caution when installing splashguards to front fenders by hand-tightening the attachment screws. Screw guns may shock load the screw resulting in cracking the fiberglass.