Billet/Plus™ Competition Shifter

Fits 1989-96 Corvette with ZF S6-40 Manual Transmission

#391 5084

Installation Instructions

Thank you for choosing the Hurst Billet/Plus Shifter for your Corvette.

This shifter is designed to reduce the throw approximately 30% for shorter shifts, precisely balancing distance, effort, comfort and control to give you the most satisfaction from a shifter. It is constructed of solid Billet Steel, making the feel of the shifter significantly more positive as compared to the stock factory unit. You will also probably notice a slight increase in effort while shifting due to the shorter throw. The shifter accepts the stock factory knob and boot to keep the interior of your vehicle looking original in appearance. **Please note that installing this shifter in 1989-94 models will eliminate the original interactive reverse lockout feature, updating those models to the passive 1995-96 style.**

IMPORTANT!
Installing the Hurst Billet/Plus Shifter requires moderate mechanical ability. Read this instruction sheet completely so that you thoroughly understand it and can become familiar with the procedure before attempting installation. We highly recommend that you use the appropriate factory service manual along with these instructions for additional procedure details.

WORK SAFELY! Perform this installation on a good clean level surface for maximum safety and with the engine turned "off". Allow the vehicle to "cool down" sufficiently before you begin so that you will avoid injury due to hot engine or exhaust pipes. Installation of this shifter requires working underneath the vehicle. **USE EXTREME CARE AND CAUTION WHEN WORKING UNDERNEATH VEHICLE.** Never get near or under vehicle until you are confident that it is safely supported and will not move or fall from its raised position. **DO NOT USE A JACK ALONE TO SUPPORT VEHICLE.**

PREPARATION FOR INSTALLATION

1. Place vehicle on a solid level surface to ensure safe installation.

2. Apply parking brake.

3. Disconnect negative (-) battery cable. **CAUTION**: When removing or connecting the battery cable terminal, use care to avoid intermittent contact (arcing) between battery post and terminal end. This generates voltage spikes that can damage sensitive ECM (Electronic Control Module) components or memory circuits.

4. Raise vehicle to allow sufficient room for working underneath, and support frame/chassis using approved automotive support stands having adequate load capacity. **CAUTION: TO AVOID ANY POSSIBILITY OF BODILY INJURY OR DAMAGE TO VEHICLE, DO NOT BEGIN THIS INSTALLATION UNTIL YOU ARE CONFIDENT THAT VEHICLE IS SECURE AND SAFELY SUPPORTED.**

NOTE: The factory console will have to be partially disassembled in order to install the Hurst Billet/Plus Shifter. Due to differences in design and model year changes, we recommend that you refer to a factory service manual for your specific model year outlining the proper procedure for console removal.

FACTORY CONSOLE DISASSEMBLY

1. Place the shifter into fourth gear. Using a small flat blade screwdriver at the front edge of the shift pattern indicator, carefully pry out indicator from shifter knob. Using a pair of Vise-Grips, clamp tightly and pull the metal "T" key up and out of the knob. Use care to avoid damaging other components.
Tip: While pulling upward, rock Vise-Grips from side to side or tap side of Vise-Grips with a hammer. Unscrew knob from shift lever. (Refer to Fig.1)

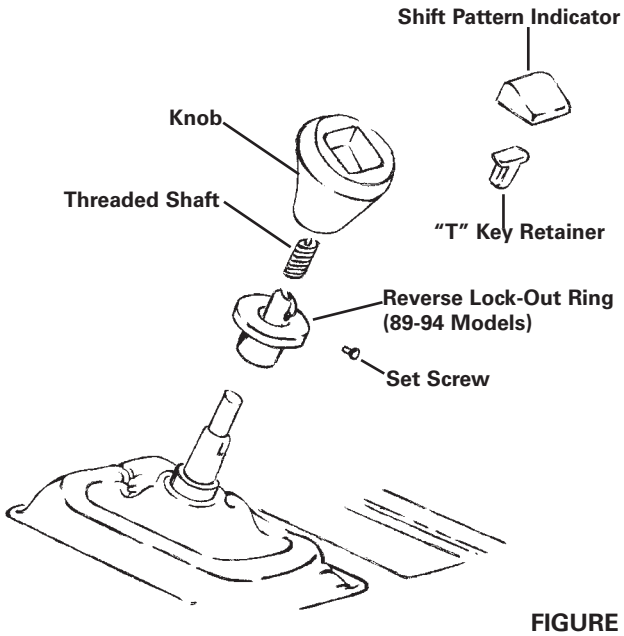

FIGURE 1

2. **'89-'94 models:** Remove the reverse lock out ring from the shifter stick using a 1.5 mm hex key wrench to loosen the set screw located on the backside of the shifter.

3. **'90-'96 models**: Remove the four (4) 7mm screws retaining the console door hinge to the center console. Pull the courtesy light wiring harness out from behind the console compartment, and disconnect to completely remove the door. (Refer to Fig.2)

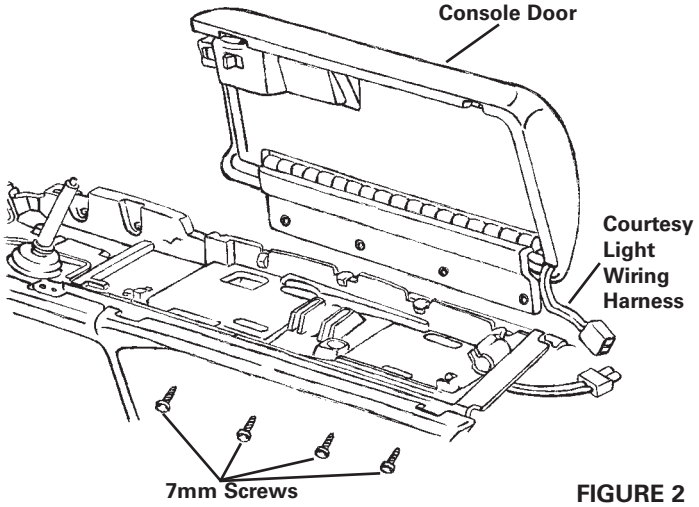

FIGURE 2

4. Place shifter into neutral position.

5. **'89 models only**: Unscrew tilt column lever, remove gauge trim panel, remove center dashboard trim panel, and remove console trim plate. Some electrical connectors will need to be disconnected to remove the console trim plate. Refer to the factory service manual for further details about these procedures.

   90-96 models: Remove the trim plate from the console by removing the three (3) 7mm screws retaining the trim plate to the console. (Refer to Fig.3) See note at top of next column.

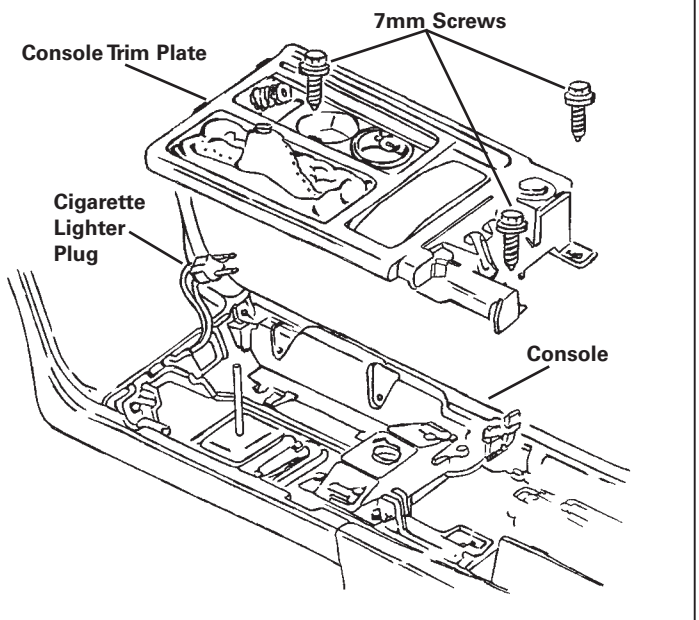

FIGURE 3

Note: Front screw may be underneath ashtray/cup holder and rear screws are typically located under front corners of console compartment carpet. Lift up the trim plate to disconnect the cigarette lighter and rear hatch release plugs. Slide leather boot off of shifter as you remove the trim plate.

FACTORY SHIFTER REMOVAL

NOTE: There are several factory items that are referenced as you follow the instructions. Please refer to figure #4 on back page for identification of these various factory components.

1. Remove four (4) 11mm acorn hex nuts that secure the metal plate retaining the rubber shifter boot. Remove the clip on the shifter shaft ('89-94 models only) and carefully slide the boot up and off. **Note: On vehicles with prior drivetrain service, the boot may be partially under the floor and difficult to remove. Use care so that you don't damage or tear the rubber. In rare cases it may be necessary to lower the transmission slightly for clearance to remove this boot (consult factory service manual for correct procedure).**

2. Remove the four (4) 10mm hex nuts retaining the shifter cover plate to the shifter housing.

3. Cut the plastic cable tie that secures the lower rubber dust boot to the cover plate and shifter housing. **Important: Use care not to cut the rubber boot. Pry the cover plate loose from the boot and remove the cover plate.**

CAUTION: Steps 4 through 9 will need to be performed underneath the vehicle. **USE EXTREME CARE AND CAUTION WHEN WORKING UNDERNEATH VEHICLE.** Never get near or under vehicle until you are confident that it is safely supported and will not move or fall from its raised position.

4. **Convertible models only**: Remove structural x-brace from frame.

5. **L98 models:** Disconnect O2 sensor and remove exhaust system from exhaust manifolds to the rear of the catalytic converter.

   LT1/4/5 models: Remove the exhaust system from the rear of the header-cats back, to allow access to the rear of the transmission.

6. Disconnect the VSS (Vehicle Speed Sensor) electrical connector and harness retainer at rear of transmission to allow more access to the lower rubber dust boot covering the shifter mechanism, which is located at the back drivers side of the transmission. The front exhaust hanger at the tailhousing can also be removed for additional working room.

7. Cut the lower plastic cable tie located at the front of the rubber dust boot and slide the boot back on the gearshift rod. **Note: Use care not to cut or tear the boot.**

8. Carefully pry the wire ring located on the gearshift rod out of its groove and slide it back far enough to access the gearshift shaft pin. **Note: Rotate the wire ring opening toward the top using two small flat blade screwdrivers to help with this procedure.**

9. Use a small straight round punch or tapered drift to drive the shaft pin upward out of the gearshift rod until it stops. Do not attempt this procedure until you are sure that the wire ring is clear of the shaft pin on top. **Note: Some pins are difficult to remove and may require moderate force. Use a medium size hammer and good quality straight punch or tapered drift slightly smaller than the shaft pin.**

Important: Use extreme care not to damage or lose existing factory shifter components, individual replacement parts are not available. Retain all spare parts.

10. From inside the vehicle, place shifter into 3rd gear position to uncouple it from the transmission gearshift shaft. Shifter assembly can now be pulled straight up out of its housing. **Important: Be careful not to drop the pivot guides and shims located at the front and rear of the pivot.** Set the guide blocks and shims aside. If shifter won't come out, make sure that pin is out far enough and gearshift rod is uncoupled from gearshift shaft. **DO NOT FORCE SHIFTER OUT.** After removal, check the rubber boot for any remaining shims that may have fallen inside.

11. Place factory shifter assembly on workbench. Knock the front shaft pin out of the gearshift rod and set aside for re-installation. Remove the "C" clip from either side of the gearshift pivot pin that retains the factory shifter into the pivot and slide the pin out of the pivot. DO NOT DISCARD. **Important: Before removing shifter from pivot, note the position of the knob retainer notch at the threads on top of the handle in relation to the pivot for re-assembly reference.**

12. Remove factory shifter by pulling it out of the bottom of the pivot.

13. Remove the flange head pin from the shaft that couples the gearshift rod to the shifter lever using a center punch slightly smaller than the pin, and driving out from the crimped end of the pin. **Note: The flange head pin will not be re-used.** Carefully remove the gearshift rod and retain the small cup spring washers that will be found under one of the ears. Slide the shaft out of the shifter noting which side the snap ring and large cup spring washers are located. **Note: The snap ring and cup washers do not need to be removed from the shaft.**

14. Prepare the Hurst Billet/Plus Shifter for installation by lubricating the bearings, external surfaces near the bearings, and bottom holes in the shifter using the grease supplied.

15. Position the shifter on the workbench with the threaded end toward you and the knob retainer notch facing down. Lubricate the gearshift rod shaft and slide it into the Hurst shifter from the LH (driver's) side, making sure that the two large cup spring washers are facing each other and retained behind the snap ring in the original location. Rotate the shaft so that the center recess is facing upward. Lubricate the small cup spring washers and place them into the recess facing each other. Align the gearshift rod ears with the hole in the gearshift rod shaft, making sure that the small cup spring washers are in place under the upper gearshift rod ear. Lubricate the supplied double-grooved 6mm pin. Align all parts and insert the 6mm pin. Insert the supplied small "E" clips into the grooves. **Important: Make sure the clips are properly seated in the grooves.**

16. Lubricate the inside surfaces of the pivot where the shifter will make contact. Insert the Hurst Billet/Plus Shifter into the pivot from the bottom, making sure that the knob retainer notch will be facing the rear when installed. **Note: The lower notched opening in the pivot will be positioned at the driver's front corner.**

17. Lubricate the gearshift pivot pin previously removed, and slide the pin back into place securing the shifter into the pivot. Install the new "E" clips supplied. Be sure that each clip is seated properly in its groove. **Note: It is very important to position these clips so that the clip opening is to the bottom on the passenger side and to the top on the driver's side.**

BILLET/PLUS SHIFTER INSTALLATION

1. From inside the vehicle, place shifter and pivot assembly into its housing making sure that gearshift rod is positioned toward the front. DO NOT INSTALL THE PIVOT BLOCKS OR SHIMS AT THIS TIME.

2. From underneath vehicle, slide gearshift rod onto gearshift shaft. **Note: An additional person may be needed inside the car to lift shifter slightly out of the housing to align the gearshift rod with the gearshift shaft.**

3. Align the retainer pin hole in the gearshift rod with the hole in the gearshift shaft. Replace and carefully drive the retainer pin back into the hole until it is all the way in. Slide wire ring back into its groove making sure that it is completely seated.

4. From inside the vehicle, install the pivot guides onto the pivot pins and replace the shims into their original locations. If necessary, add additional shims (supplied) at either end to obtain a tighter fit. These are supplied in .005" and .010" thickness.

5. Slide the shifter cover plate into the lower rubber dust boot and onto the housing. Secure with the four (4) 10mm hex nuts previously removed. Make sure the cover plate is properly seated in the rubber dust boot. Tighten the nuts securely.

6. Temporarily thread shifter knob onto stick, and test shifter operation. Move stick through entire shift pattern, making sure it engages each gear fully and that stick moves freely from side to side in "neutral" position.

7. Secure the lower rubber dust boot to the cover plate with new cable ties (supplied). **Note: Assemble two (2) cable ties as was factory original.**

8. From underneath vehicle, slide rubber boot forward onto flange of gearshift shaft seal and secure with new cable tie (supplied).

9. Re-connect VSS electrical connector and harness retainer.

10. Replace exhaust hanger if removed and replace exhaust system. On L98 models re-connect O2 sensor. On convertible models replace structural x-brace.

11. Remove vehicle from support stands.

12. Remove shift knob and replace the upper rubber shifter boot so that it rests on top of the floor, surrounding the raised edge of the floor opening. Replace the metal retainer plate and secure with the four (4) 11mm acorn hex nuts previously removed. Tighten securely.

13. **'89-'94 models**: Install the clip previously removed from the factory shifter onto the groove of the Hurst Billet/Plus Shifter. **Note: There are two (2) grooves on the Hurst handle. The top groove is for the stock location and the optional lower groove allows the leather boot to be positioned lower on the stick exposing the Hurst "H" logo.** If you select the lower groove, slide the supplied O-ring over the stick and into the upper groove. Lightly lubricate the O-ring with the grease supplied so that the shifter boot plastic trim ring will slide easily over it.

14. Replace console trim plate and factory leather boot while reconnecting plugs for cigarette lighter and rear hatch release. On '89 models, replace the center dashboard trim plate, gauge trim plate, and tilt column lever.

15. Reconnect courtesy light wiring harness and replace console door.

16. Replace shifter knob and insert metal "T" key back into the slot. Tap down on key using a flat punch until shift knob is tight. If shift knob does not tighten completely, remove the key and flatten its front face slightly using a hammer on a flat surface. Push shift pattern indicator back into knob. **Note: Shifter stick is threaded to accept any knob having 9/16"-18 thread.**

17. Re-connect negative battery cable if previously disconnected.

TECHNICAL SERVICE

A highly-trained Technical Services Department is maintained by Mr. Gasket Performance Group to answer your technical questions, provide additional product information and offer various recommendations. See your local Hurst retailer for specific prices.

Hurst Performance
10601 Memphis Ave. #12
Cleveland, Ohio 44144
216.688.8300 ext. 500
Monday-Friday 8:30 A.M.to5:00 P.M. E.S.T

Visit us on the web at: www.mrgasket.com
or via E-mail at: tech@mrgasket.com

RETAIN THIS INSTRUCTION SHEET FOR FUTURE REFERENCE.

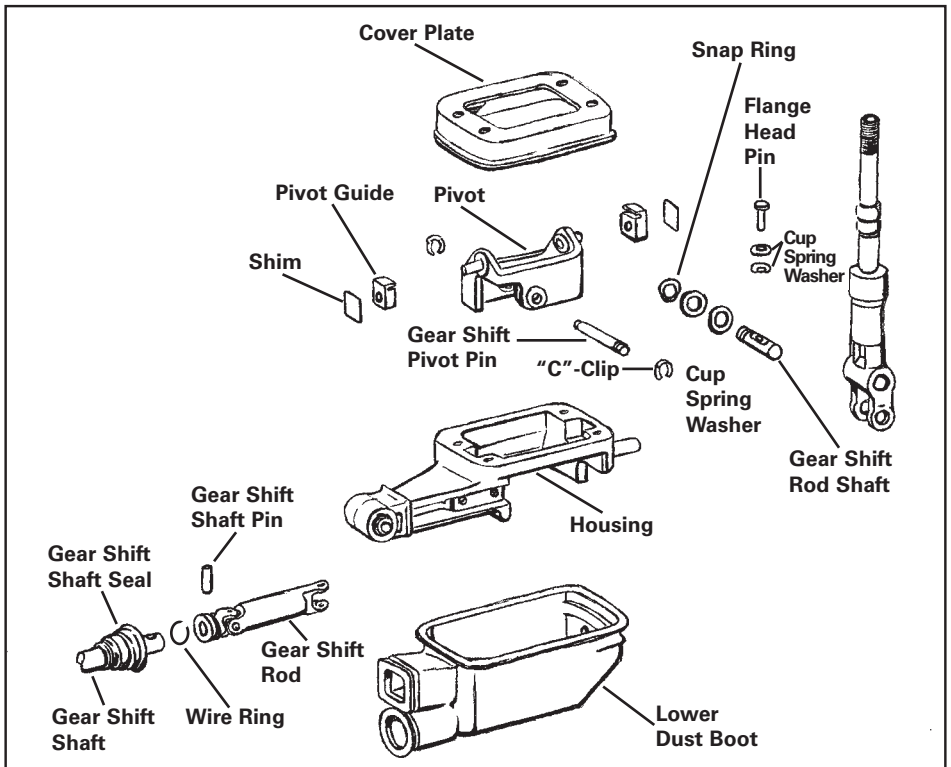

FIGURE 4