PART NO. **5449**

DODGE RAM WITH FENDER FLARES - LOGO READY

FRONT MUD GUARD INSTALLATION INSTRUCTIONS

Please read instructions thoroughly before installation.

Tools Required

- 1/8” drill bit / Drill
- Short Phillips screwdriver
- Marking utensil (fine tip marker, grease pencil, etc.)

Package Contents

- Driver & Passenger Side Front Mud Guards
- #10 SEM Screws (qty. 4)
- Small U-Clips (qty. 2)
- Instruction sheet

NOTE: Turn wheels all the way left or right for easier installation. It may be necessary to remove the wheels before mud guard installation.

1. Remove the existing fasteners from locations A and C (Figure 1).
2. Attach the mud guard at locations A and C with the existing fasteners. Check the mud guard fit and appearance before tightening.
3. Using the mud guard as a template, mark and drill 1/8” holes at locations B and D.
4. Install a #10 SEM Screw at location B.
5. Install a #10 SEM Screw at location D, thru the mud guard, the fender liner, and into a Small U-Clip on the backside of the fender liner. NOTE: The Small U-Clip does not clip over the fender liner.

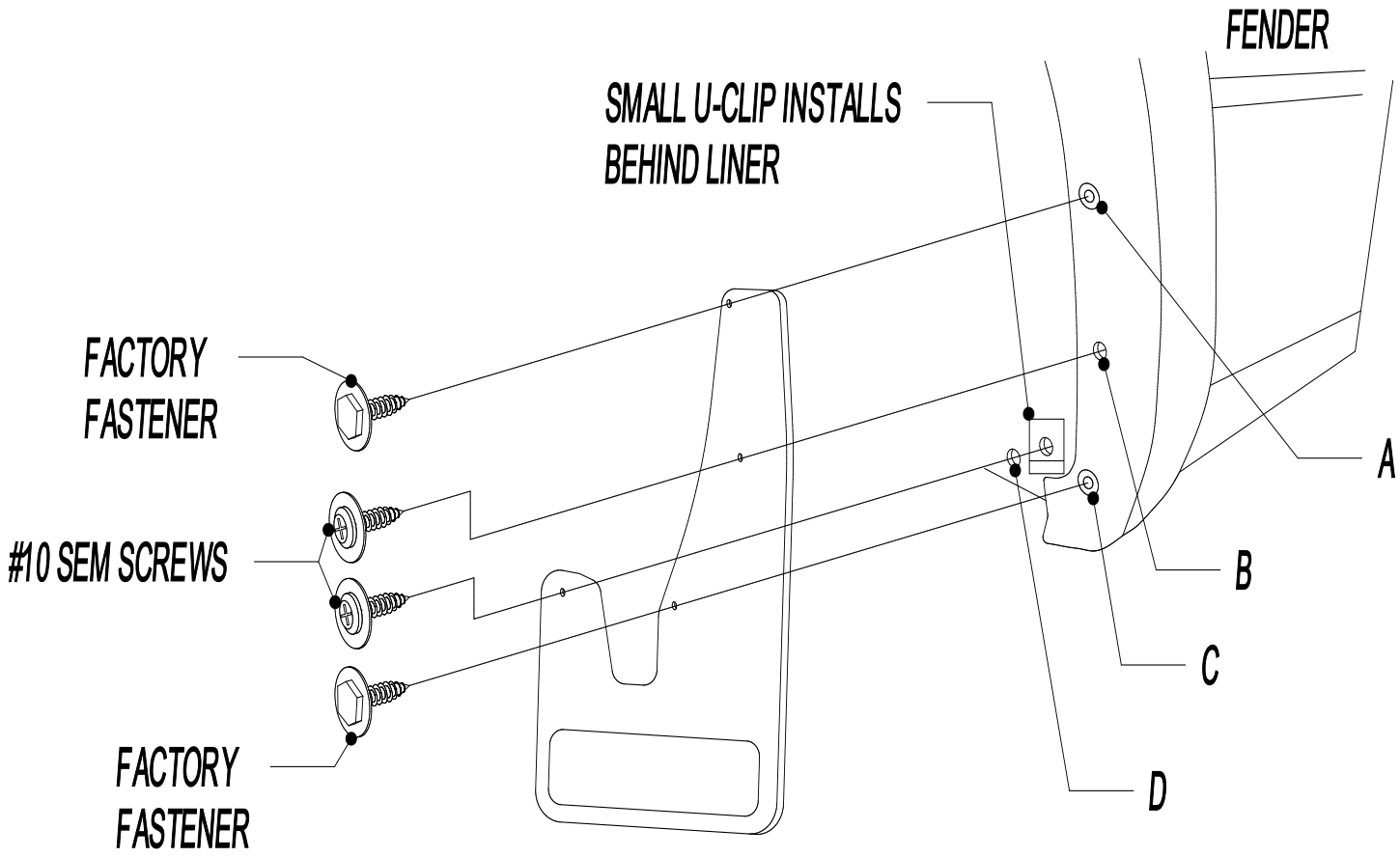

NEED A LOGO FOR YOUR NEW MUD GUARD? TRY AN INTERNET SEARCH FOR “EMBLEM” ON E-BAY, AMAZON OR YOUR FAVORITE AUTOMOTIVE SITE.