VOLANT AIR INTAKE SYSTEMS
PART NO.: 411830
INSTALLATION INSTRUCTIONS
WWW.VOLANT.COM
TECH SUPPORT: (909) 476-7225

411830 PARTS LIST

1	VOLANT FILTER BOX	2	1/4"-20 BOLTS	2	STAINLESS STEEL SCREWS
1	VOLANT FILTER BOX LID	4	1/4" WASHERS	1	MAF SENSOR GASKET
1	VOLANT AIR DUCT	2	1/4" LOCK WASHERS		
1	VOLANT FRONT END DUCT	2	1/4" NUTS		
1	POWERCORE FILTER W/CLAMP	4	1/4" TRUSS HEAD SCREWS		
2	#048 CLAMP	4	1/4" RUBBER WASHERS		
1	3 1/4" X 3" SLEEVE	2	VOLANT BRACKETS		

TOP VIEW

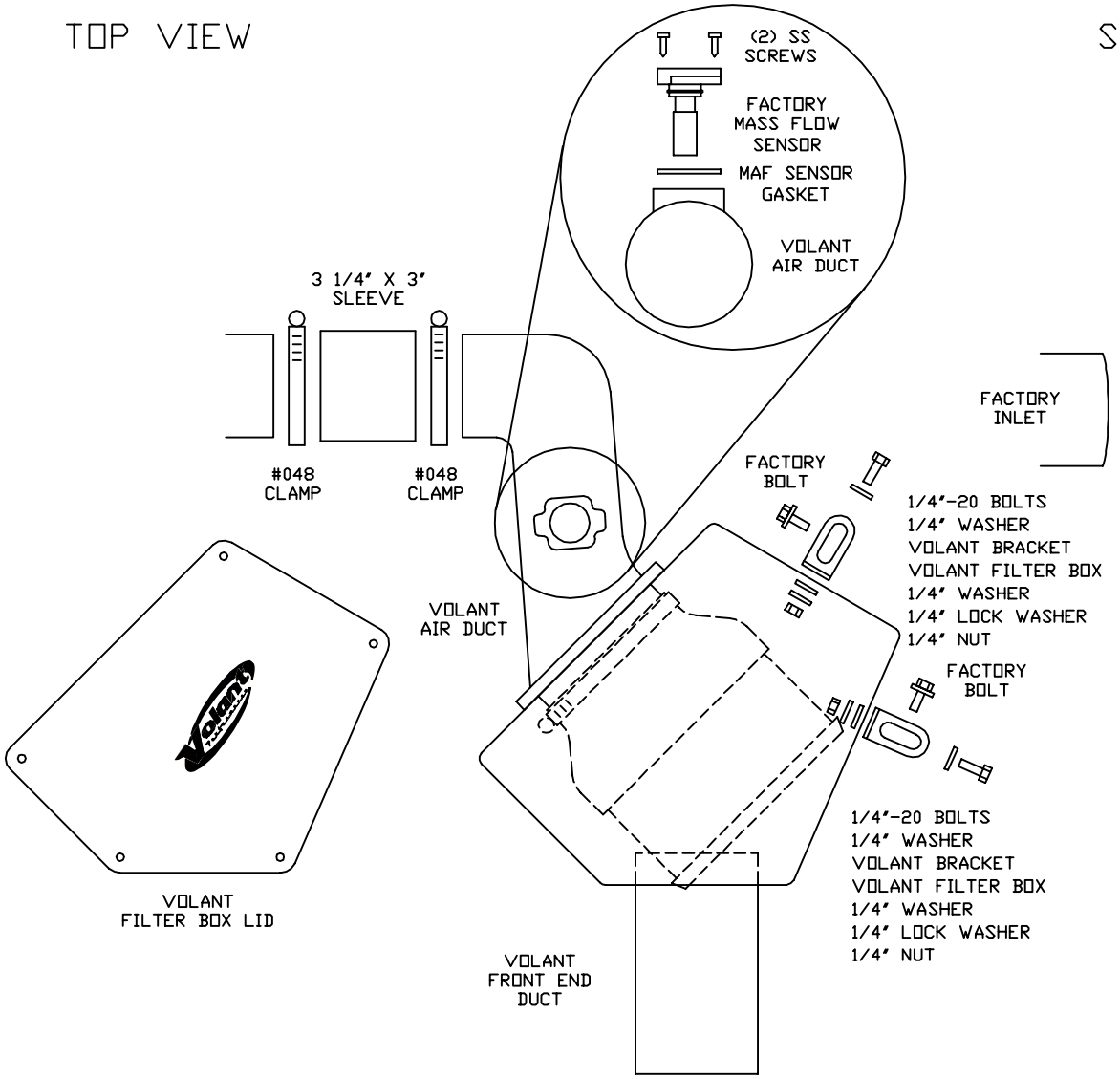
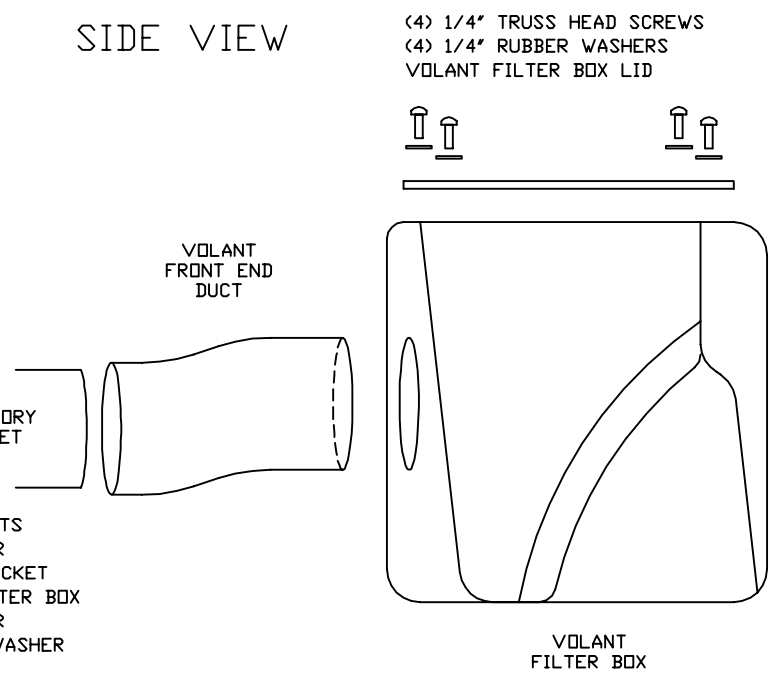
SIDE VIEW