Air Lift™ PERFORMANCE

Kit 75518

MK IV Platform

Slam Front Application

NOTE: FOR USE ON VEHICLES WITH FRAME C-NOTCH MODIFICATIONS ONLY. FRONT SWAY BAR MUST BE REMOVED.

INSTALLATION GUIDE

For maximum effectiveness and safety, please read these instructions completely before proceeding with installation.

Failure to read these instructions can result in an incorrect installation.

MN-756 • (021111) • ECR 7189

TABLE OF CONTENTS

Introduction 3
Notation Explanation 3
Important Safety Notices 3

Installation Diagram 4
Hardware List 4
Tools List 4

Installing the Air Suspension 5
Preparing the Vehicle 5
Removing the Strut 5
Installing the New Strut Assembly 6

Before Operating 6
Installation Checklist 7

Product Use, Maintenance and Servicing 8
Suggested Driving and Maximum Air Pressures 8
Maintenance Guidelines 8

Troubleshooting Guide 8

Frequently Asked Questions 8
Tuning the Air Pressure 9
Checking for Leaks 9
Fixing Leaks 9

Warranty & Returns Policy 10

Replacement Information 10

Contact Information 10

Performance Kit 75518 Template 11

Introduction

The purpose of this publication is to assist with the installation, maintenance and troubleshooting of this MKIV Performance Slam kit.

It is important to read and understand the entire installation guide before beginning installation or performing any maintenance, service or repair. The information includes a hardware list, tool list, step-by-step installation information, maintenance tips, safety information and a troubleshooting guide.

Air Lift Company reserves the right to make changes and improvements to its products and publications at any time. For the latest version of this manual, contact Air Lift Company at (800) 248-0892 or visit our website at www.airliftperformance.com.

NOTATION EXPLANATION

Hazard notations appear in various locations in this publication. Information which is highlighted by one of these notations must be observed to help minimize risk of personal injury or possible improper installation which may render the vehicle unsafe. Notes are used to help emphasize areas of procedural importance and provide helpful suggestions. The following definitions explain the use of these notations as they appear throughout this guide.

⚠ DANGER INDICATES IMMEDIATE HAZARDS WHICH WILL RESULT IN SEVERE PERSONAL INJURY OR DEATH.

⚠ WARNING INDICATES HAZARDS OR UNSAFE PRACTICES WHICH COULD RESULT IN SEVERE PERSONAL INJURY OR DEATH.

⚠ CAUTION INDICATES HAZARDS OR UNSAFE PRACTICES WHICH COULD RESULT IN DAMAGE TO THE MACHINE OR MINOR PERSONAL INJURY.

NOTE *Indicates a procedure, practice or hint which is important to highlight.*

IMPORTANT SAFETY NOTICES

The installation of this kit does not alter the Gross Vehicle Weight Rating (GVWR) or payload of the vehicle. Check your vehicle's owner's manual and do not exceed the maximum load listed for your vehicle.

Gross Vehicle Weight Rating: The maximum allowable weight of the fully loaded vehicle (including passengers and cargo). This number — along with other weight limits, as well as tire, rim size and inflation pressure data — is shown on the vehicle's Safety Compliance Certification Label.

Payload: The combined, maximum allowable weight of cargo and passengers that the vehicle is designed to carry. Payload is GVWR minus the Base Curb Weight.

⚠ WARNING DO NOT INFLATE AIR SPRINGS WHILE OFF OF THE VEHICLE. DAMAGE TO ASSEMBLY MAY RESULT AND VOID WARRANTY.

⚠ CAUTION DO NOT WELD TO, OR MODIFY PERFORMANCE STRUTS/SHOCKS IN ANY WAY. DAMAGE TO UNIT MAY OCCUR AND WILL VOID WARRANTY.

Installation Diagram

HARDWARE LIST

Item	Part #	Description	Qty
A	35243	Strut	2
B	20997	Leader Hose,1/4”	2
C	21810	Union, 1/4” FNPT-1/4” PTC	2
D	21987	1/4” FNPT X 3/8” Fitting	2
E		Thread Protector	6
F	18433	5/16” Flat Washer	6
G	18438	5/16”-18 Nyloc Nut	6

TOOLS LIST

Description
Jack Stands
Hoist or Jack
Metric Wrenches
Standard Wrenches
VW Spreader Tool 3424
Center Punch
Hammer
Drill
3/8” Drill Bit

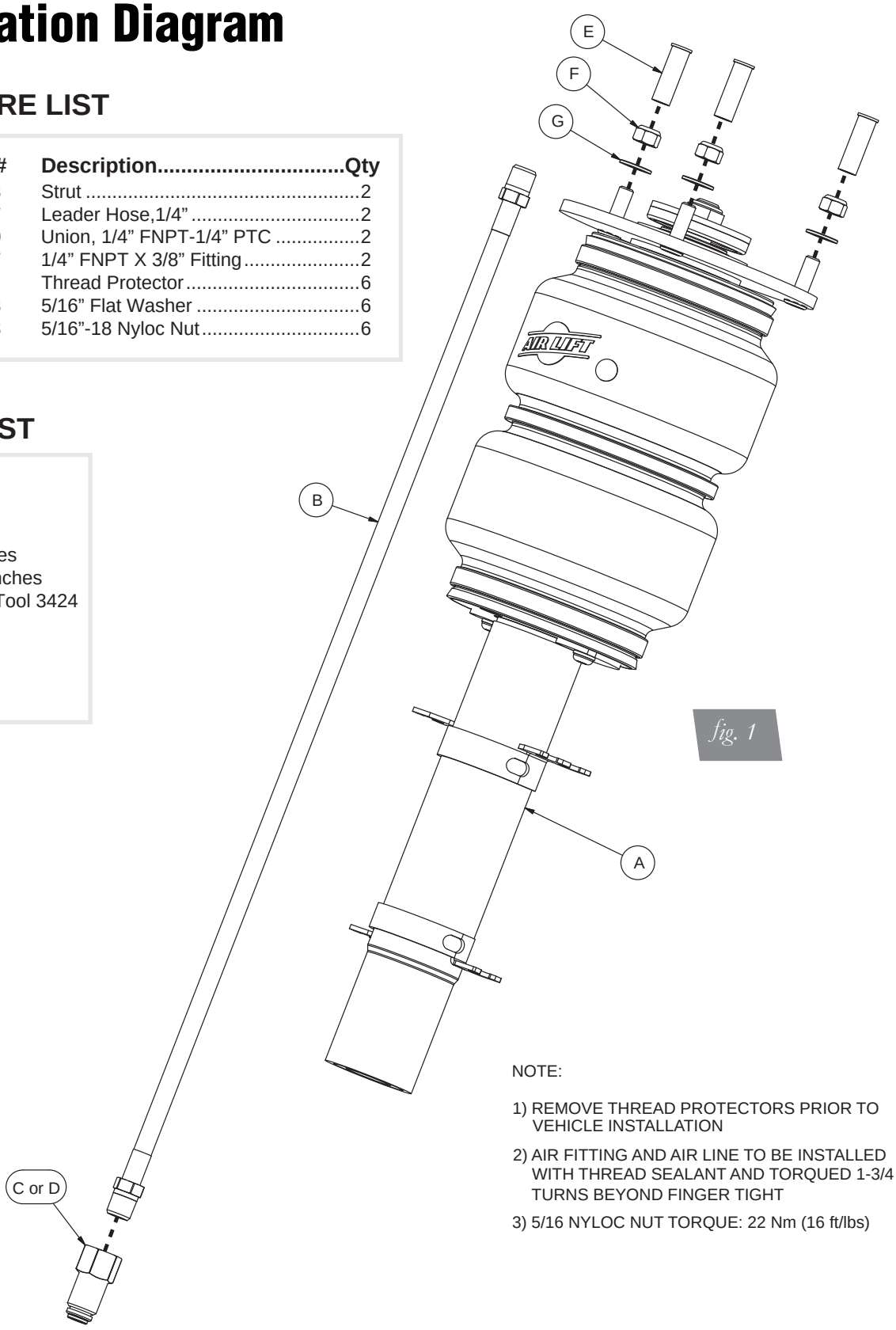

fig. 1

NOTE:

1) REMOVE THREAD PROTECTORS PRIOR TO VEHICLE INSTALLATION

2) AIR FITTING AND AIR LINE TO BE INSTALLED WITH THREAD SEALANT AND TORQUED 1-3/4 TURNS BEYOND FINGER TIGHT

3) 5/16 NYLOC NUT TORQUE: 22 Nm (16 ft/lbs)

STOP! Missing or damaged parts? Call Air Lift customer service at (800) 248-0892 for a replacement part.

Installing the Air Suspension

PREPARING THE VEHICLE

1. Elevate the vehicle and support the body with a hoist or jack stands.
2. Remove the front wheels.

REMOVING THE STRUT

1. Unbolt the two mounting bolts for the brake caliper and secure or hang the caliper to the body of the vehicle (fig. 2).

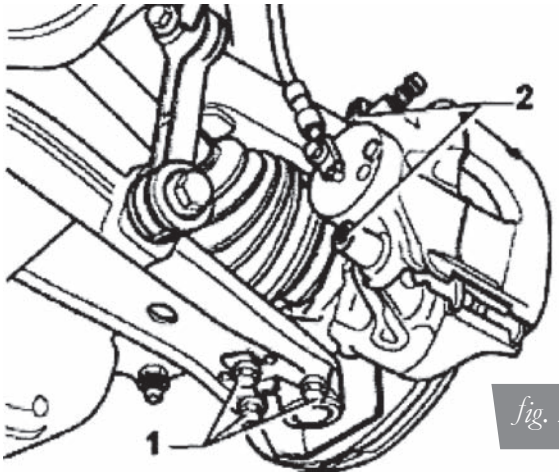

fig. 2

⚠ CAUTION

DO NOT ALLOW CALIPER TO HANG FROM THE BRAKE LINE OR DAMAGE MAY OCCUR.

2. Unclip the speed sensor wiring from the strut.
3. Remove the three lower bolts from the lower ball joint and control arm. Detach the ball joint and hub assembly from the control arm (fig. 2).
4. To remove the left and right front strut, mark the installed orientation and disconnect the axle from the transmission drive flange.

⚠ CAUTION

TO PREVENT DAMAGE TO THE AXLE JOINT, DO NOT ALLOW THE AXLE TO HANG FREE

5. Remove the bolt at the back of the hub assembly to the strut.
6. Spread the hub assembly slot and push down on the hub to release the strut from its lower mount. (fig. 3 - Volkswagen specific tool is spreader 3424)

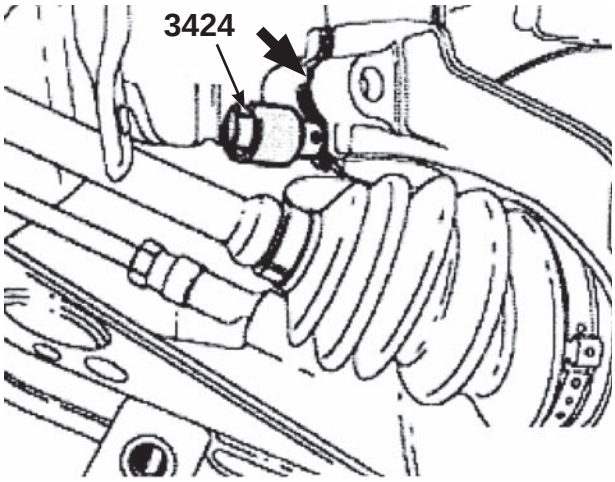

fig. 3

7. Remove the upper mount nut and remove strut from vehicle.
8. Reattach the lower control arm to the ball joint and torque bolts to 20 Nm (15 ft. lbs.) + 90.
9. Reinstall the axle shaft to the transmission drive flange in the previously installed orientation. Torque bolts to

   M8 x 18: 20 Nm (15 ft. lbs.) + 90°

   M8 x 28: 20 Nm (15 ft. lbs.) + 90°

   M8 x 48: 20 Nm (15 ft. lbs.) + 90°

   M10 x 23: 50 Nm (37 ft. lbs.) + 45°

   M10 x 52: 50 Nm (37 ft. lbs.) + 45°

INSTALLING THE NEW STRUT ASSEMBLY

1. Install braided hose (B) into the lower end-cap of the airspring with thread sealant or Teflon tape applied to the threads of the fitting. Tighten finger tight and torque fitting 1-3/4 turns beyond hand tight. Attach the fitting (C or D) to the braided line with thread sealant (fig. 4).

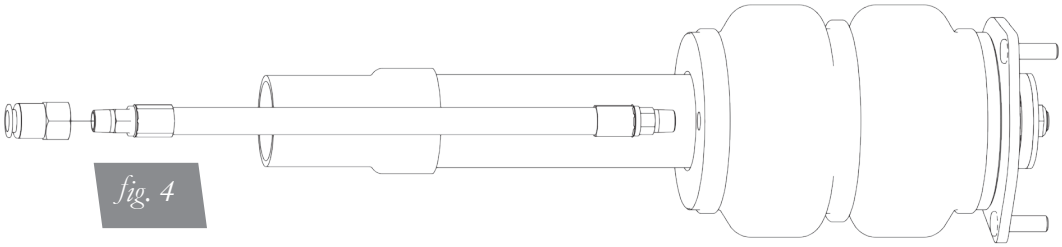

fig. 4

2. Using the supplied template and working from inside the strut pocket, center the template and orient so that there is clearance for the washers on top. Once the template is centered, secure in place with tape. Use a center punch and hammer on the center lines of the template to mark into the drilling surface. Remove the template and drill 3/8” holes through the strut pocket. Insert the strut upper mounting bracket through the holes. If it does not fit, adjust the holes accordingly. Do not attach the strut to the vehicle body yet.
3. Insert strut into the hub assembly. Reinstall the lower mounting bolt and torque to 70 Nm (52 ft. lbs.) +90°.
4. Lift assembly into strut pocket and align upper mounting bolts with three holes. Using the supplied nuts and washers, tighten the upper mount to 22 NM (16 lb-ft).
5. Reinstall the brake caliper and torque to 28Nm (21 lb-ft).
6. Attach the speed sensor wiring to the new strut assembly.

Before Operating

1. Some vehicles come with a nine-position damping dial for added adjustability (fig. 5). If not, proceed to 2.

Before driving your vehicle, set the new struts to their highest setting by turning the black dial on the shaft of the strut as far as it will go to the right (position 9).

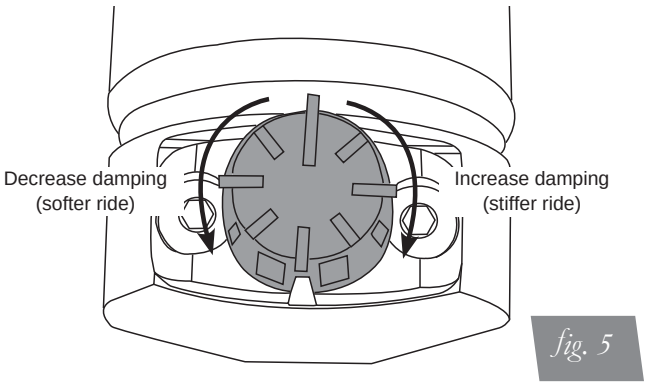

fig. 5

2. Next, completely deflate and reinflate the air bags 2-3 times. This procedure will purge any trapped air in the dampers and allow for maximum performance. For ride performance and the most versatility, Lifestyle recommends setting the strut dial (if equipped) to position 6 or higher.

⚠ CAUTION MAKE SURE THE FRONT WHEELS ARE STRAIGHT WHEN DEFLATING AND REINFLATING AIR BAGS.

3. Inflate and deflate the system (do not exceed 125 PSI) to check for clearance or binding issues. With the air springs deflated, check clearances on everything so as not to pinch brake lines, vent tubes, etc. Clear lines if necessary.
4. Inflate the air springs to 75-90 PSI and check all connections for leaks.
5. Air Lift part #27669 or #27671, AutoPilot V2 Air Management System, is highly recommended for this product.
6. Please continue by reading the Product Use, Maintenance and Servicing section.

INSTALLATION CHECKLIST

- ❑ Clearance test — Inflate the air springs to 75-90 PSI and make sure there is at least ½" clearance from anything that might rub against each sleeve. Be sure to check the tire, brake drum, frame, shock absorbers and brake cables.
- ❑ Leak test before road test — Inflate the air springs to 75-90 PSI and check all connections for leaks. All leaks must be eliminated before the vehicle is road tested.
- ❑ Heat test — Be sure there is sufficient clearance from heat sources, at least 6" for air springs and air lines. If a heat shield was included in the kit, install it. If there is no heat shield, but one is required, call Air Lift customer service at (800) 248-0892.
- ❑ Fastener test — Recheck all bolts for proper torque.
- ❑ Road test — The vehicle should be road tested after the preceding tests. Inflate the springs to recommended driving pressures. Drive the vehicle 10 miles and recheck for clearance, loose fasteners and air leaks.
- ❑ Operating instructions — If professionally installed, the installer should review the operating instructions with the owner. Be sure to provide the owner with all of the paperwork that came with the kit.

Technician's Signature _____

Date _____

POST-INSTALLATION CHECKLIST

- ❑ Overnight leak down test — Recheck air pressure after the vehicle has been used for 24 hours. If the pressure has dropped more than 5 PSI, then there is a leak that must be fixed. Either fix the leak yourself or return to the installer for service.
- ❑ Air pressure requirements — Regardless of load, the air pressure should always be adjusted to maintain adequate ride height at all times while driving.
- ❑ Thirty day or 500 mile test — Recheck the air spring system after 30 days or 500 miles, whichever comes first. If any part shows signs of rubbing or abrasion, the source should be identified and moved, if possible. If it is not possible to relocate the cause of the abrasion, the air spring may need to be remounted. If professionally installed, the installer should be consulted. Check all fasteners for tightness.

Product Use, Maintenance and Servicing

Suggested Driving Air Pressure	Maximum Air Pressure
45 PSI	125 PSI
FAILURE TO MAINTAIN ADEQUATE MINIMUM PRESSURE (OR PRESSURE PROPORTIONAL TO LOAD) WILL RESULT IN BOTTOMING OUT, OVER-EXTENSION OR RUBBING AGAINST ANOTHER COMPONENT AND WILL **VOID THE WARRANTY**.	

MAINTENANCE GUIDELINES

NOTE *By following these steps, vehicle owners will obtain the longest life and best results from their air spring.*

1. Check the air pressure before driving.
2. Never inflate beyond 125 PSI.
3. If you develop an air leak in the system, use a soapy water solution to check all air line connections, before deflating and removing the spring.
4. When increasing load, always adjust the air pressure to maintain normal ride height. Increase or decrease pressure from the system as necessary to attain normal ride height for optimal ride and handling. Remember that loads carried behind the axle (including tongue loads) require more leveling force (pressure) than those carried directly over the axle.

⚠ CAUTION FOR YOUR SAFETY AND TO PREVENT DAMAGE TO YOUR VEHICLE, DO NOT EXCEED MAXIMUM GROSS VEHICLE WEIGHT RATING (GVWR), AS INDICATED BY THE VEHICLE MANUFACTURER. ALTHOUGH YOUR AIR SPRINGS ARE RATED AT A MAXIMUM INFLATION PRESSURE OF 125 PSI, THE AIR PRESSURE ACTUALLY NEEDED IS DEPENDENT ON YOUR LOAD.

5. Always add air to the springs in small quantities, checking the pressure frequently. Sleeves require less air volume than a tire and inflate quickly.
6. Should it become necessary to raise the vehicle by the frame, make sure the control system is turned off before lifting.

Troubleshooting Guide

1. Leak test the air line connections, threaded connection of the elbow into the air spring, and the inflation valves.
2. Inspect the air lines to be sure none are pinched. Tie straps may be too tight. Loosen or replace the strap and replace leaking components.
3. Inspect the air line for holes and cracks. Replace as needed.
4. Look for a kink or fold in the air line. Reroute as needed.

If the preceding steps do not solve the problem, it is most likely caused by a failed air spring — either a factory defect or an operating problem. Please call Air Lift at (800) 248-0892 for assistance or a replacement air spring.

Frequently Asked Questions

Q. Will installing air springs increase the weight ratings of a vehicle?

No. Adding air springs will not change the weight ratings (GAWR, GCWR and/or GVWR) of a vehicle. Exceeding the GVWR is dangerous and voids the Air Lift warranty.

Q. How long should air springs last?

If the air springs are properly installed and maintained they can last indefinitely.

Q. Will raising the vehicle on a hoist for service work damage the air springs?

No. The vehicle can be lifted on a hoist for short-term service work such as tire rotation or oil changes. However, if the vehicle will be on the hoist for a prolonged period of time, support the axle with jack stands in order to take the tension off of the air springs.

TUNING THE AIR PRESSURE

Pressure determination comes down to three things — level vehicle, ride comfort, and stability.

1. **Level vehicle**

   If the vehicle's headlights are shining into the trees or the vehicle is leaning to one side, then it is not level. Raise the air pressure to correct either of these problems and level the vehicle.

2. **Ride comfort**

   If the vehicle has a rough or harsh ride it may be due to either too much pressure or not enough. Try different pressures to determine the best ride comfort. See Air Lift suggested driving air pressure.

3. **Stability**

   Stability translates into safety and should be the priority, meaning the driver may need to sacrifice a perfectly level and comfortable ride. Stability issues include roll control, bounce, dive during braking and sponginess. Tuning out these problems usually requires additional air pressure, strut damping, or both.

CHECKING FOR LEAKS

1. Inflate the air spring to 80 PSI.
2. Spray all connections and the inflation valves with a solution of 1/5 liquid dish soap and 4/5 water. Spot leaks easily by looking for bubbles in the soapy water.
3. After the test, deflate the springs to the minimum pressure required to restore the system to normal ride height.
4. Check the air pressure again after 24 hours. A 2-4 PSI loss after initial installation is normal. Retest for leaks if the loss is more than 5 lbs.

FIXING LEAKS

1. If there is a problem with a swivel fitting:
   a. Check the air line connection by deflating the spring and removing the line by pulling the collar against the fitting and pulling firmly on the air line. Trim 1" off the end of the air line. Be sure the cut is clean and square (see fig. 6). Reinsert the air line into the push-to-connect fitting.
   b. Check the threaded connection by tightening the swivel fitting another ½ turn. If it still leaks, deflate the air spring, remove the fitting, and re-coat the threads with thread sealant. Reinstall by hand tightening as much as possible and then use a wrench for an additional two turns.
2. If the preceding steps have not resolved the problem, call Air Lift customer service at (800) 248-0892.

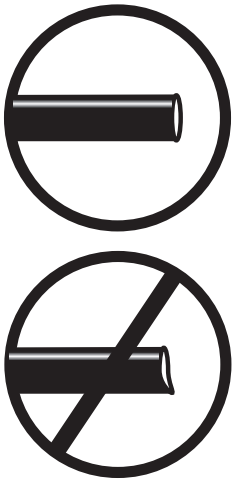

fig. 6

Warranty and Returns Policy

Air Lift Company warrants its performance products for one year to the original purchaser against manufacturing defects one year from the date of purchase when used on cars and trucks as specified under normal operating conditions. The warranty does not apply to products that have been improperly applied, improperly installed, or which have not been maintained in accordance with installation instructions furnished with all products. The consumer will be responsible for removing (labor charges) the defective product from the vehicle and returning it, transportation costs prepaid, to the dealer from which it was purchased or to Air Lift Company for verification.

Air Lift will repair or replace, at its option, defective products or components. A minimum $10.00 shipping and handling charge will apply to all warranty claims. Before returning any defective product, you must call Air Lift at (800) 248-0892 in the U.S. and Canada (elsewhere, (517) 322-2144) for a Returned Materials Authorization (RMA) number. Returns to Air Lift can be sent to: Air Lift Company • 2727 Snow Road • Lansing, MI • 48917.

Product failures resulting from abnormal use or misuse are excluded from this warranty. The loss of use of the product, loss of time, inconvenience, commercial loss or consequential damages is not covered. The consumer is responsible for installation/reinstallation (labor charges) of the product. Air Lift Company reserves the right to change the design of any product without assuming any obligation to modify any product previously manufactured.

This warranty gives you specific legal rights and you may also have other rights that may vary from state-to-state. Some states do not allow limitations on how long an implied warranty lasts or allow the exclusion or limitation of incidental or consequential damages. The above limitation or exclusion may not apply to you. There are no warranties, expressed or implied including any implied warranties of merchantability and fitness, which extend beyond this warranty period. There are no warranties that extend beyond the description on the face hereof. Seller disclaims the implied warranty of merchantability. (Dated proof of purchase required.)

Replacement Information

If you need replacement parts, contact the local dealer or call Air Lift customer service at (800) 248-0892. Most parts are immediately available and can be shipped the same day.

Contact Air Lift Company customer service at (800) 248-0892 first if:

- Parts are missing from the kit.
- Need technical assistance on installation or operation.
- Broken or defective parts in the kit.
- Wrong parts in the kit.
- Have a warranty claim or question.

Contact the retailer where the kit was purchased:

- If it is necessary to return or exchange the kit for any reason.
- If there is a problem with shipping if shipped from the retailer.
- If there is a problem with the price.

Contact Information

If you have any questions, comments or need technical assistance contact our customer service department by calling (800) 248-0892, Monday through Friday. For calls from outside the USA or Canada, our local number is (517) 322-2144. You may also contact customer service anytime by e-mail at techsupport@airliftperformance.com.

For inquiries by mail, our address is PO Box 80167, Lansing, MI 48908-0167. Our shipping address for returns is 2727 Snow Road, Lansing, MI 48917.

You may also contact our sales team anytime by e-mail at sales@airliftperformance.com or on the web at www.airliftperformance.com.

Performance Kit 75518 Template

NOTE: MAKE SURE THE TEMPLATE IS CORRECT BY CHECKING HOLE LOCATIONS WITH ACTUAL BRACKET.

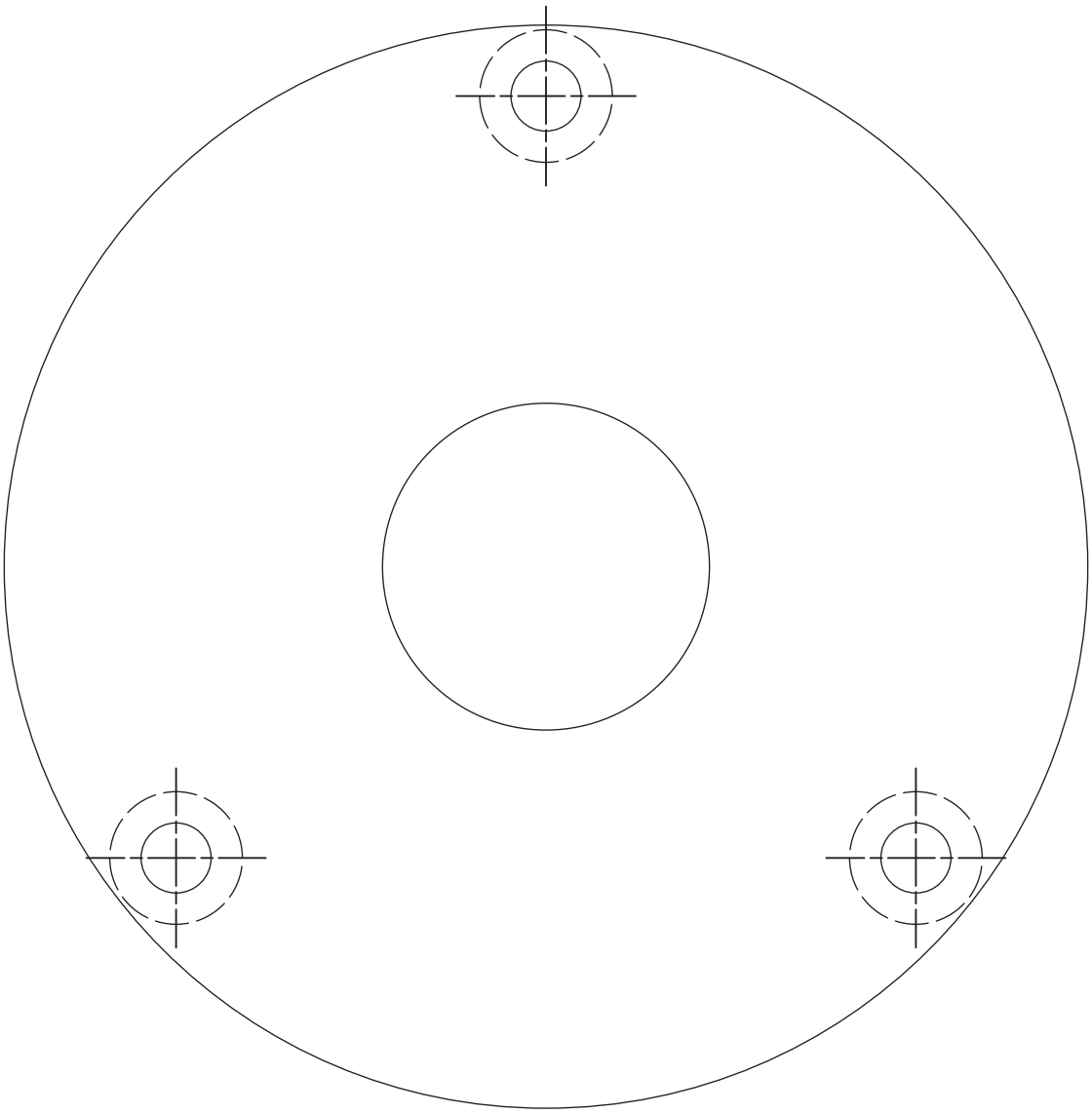

DASHED LINES ARE FOR WASHER CLEARANCE

Need Help?

Contact our customer service department by calling (800) 248-0892. For calls from outside the USA or Canada, our local number is (517) 322-2144.

Thank you for purchasing Air Lift Performance products!

Air Lift Company • 2727 Snow Road • Lansing, MI 48917 or PO Box 80167 • Lansing, MI 48908-0167
Toll Free (800) 248-0892 • Local (517) 322-2144 • Fax (517) 322-0240 • www.airliftperformance.com

Printed in
the USA