11181 93-02 TOYOTA COROLLA, 93-02 GEO / CHEVY PRIZM

7/18/2012

GROSS LOAD CAPACITY WHEN USED AS A WEIGHT CARRYING HITCH: 2000 LBS. TRAILER WEIGHT & 200 LBS. TONGUE WEIGHT.

*****DO NOT EXCEED VEHICLE MANUFACTURER'S RECOMMENDED TOWING CAPACITY.*****

WARNING: ALL NON-TRAILER LOADS APPLIED TO THIS PRODUCT MUST BE SUPPORTED BY AUXILIARY STABILIZING STRAPS.

**** FAILURE TO PROPERLY SUPPORT NON-TRAILER LOADS WILL VOID PRODUCT WARRANTY****

HAVING INSTALLATION QUESTIONS? CALL TECHNICAL SUPPORT AT 1-800-798-0813

Parts List

ITEM	QTY	PART NUMBER	DESCRIPTION
1	6	1/2"	CONICAL TOOTHED WASHER
2	6	7/16-14	HEX FLANGE NUT
3	6	7/16-14 x 1 1/2	CARRIAGE BOLT
4	1	CM-438-FW	7/16 " FISHWIRE TOOL
5	6	CM-SP2	.250 x .88 x 2.25" SQUARE HOLE SPACER
6	6	M12-1.25 x 30mm	HEX BOLT

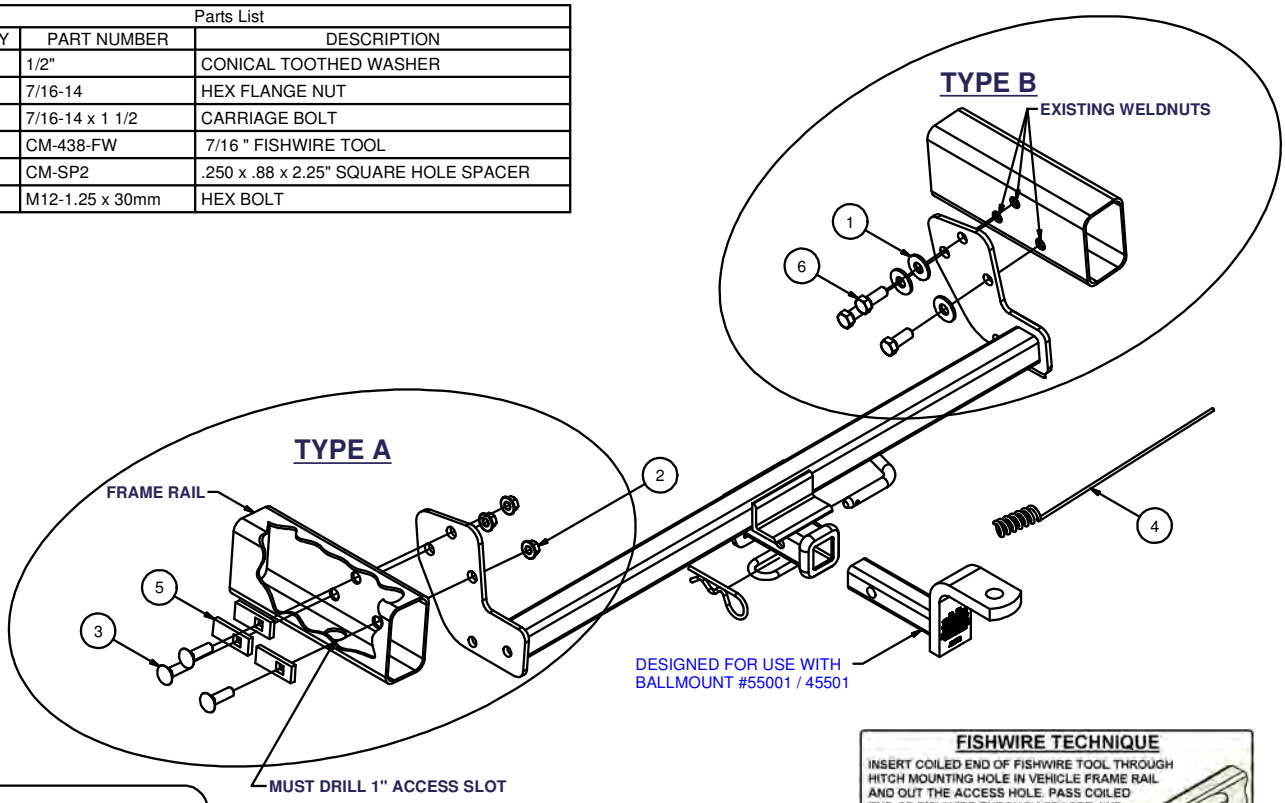

HITCH WEIGHT: 24 LBS.

INSTALL TIME

PROFESSIONAL: 30 MINUTES

NOVICE (DIY): 60 MINUTES

INSTALL NOTES:

- FISHWIRE TYPE A
- DRILLING REQUIRED

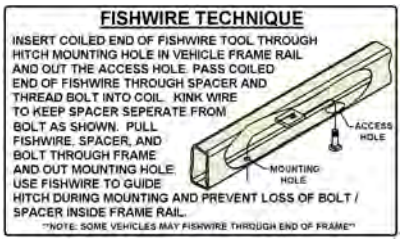

INSTALLATION STEPS

1a.) If vehicle is equipped with tie-down brackets and/or existing weldnuts, remove the brackets from inboard side of the frame rail by removing three M12 bolts, each side. Return tie-down brackets and bolts to vehicle owner for reinstallation if hitch is removed.

1b.) If vehicle is not equipped with weldnuts, drill a 1" dia. acess hole in the bottom of the frame rail.

2) Remove fascia retaining bolts which fasten plastic fascia straps to vehicle trunk pan.

3) Notch metal panel to avoid contact with hitch side bracket.

4) Raise hitch into position so that the hitch cross member is above the plastic fascia straps.

5) Install fasteners per vehicle configuration, as in step one. M12 bolts are used if weld nuts are avalible as shown in TYPE B.

6) Reattach driver's side plastic fascia to trunk pan. With passengers's side fascia strap pushed up, out of the way, reinstall fascia retaining bolts (removed in step two) into weldnut in trunk pan to prevent water and fumes from entering vehicle.

7) Torque M12 fasteners to 86 ft-lbs. 7/16" fasteners to 70 ft-lbs.

PERIODICALLY CHECK THIS RECEIVER HITCH TO ENSURE THAT ALL FASTENERS ARE TIGHT AND THAT ALL STRUCTURAL COMPONENTS ARE SOUND.

Curt Manufacturing Inc., warrants this product to be free of defects in material and/or workmanship at the time of retail purchase by the original purchaser. If the product is found to be defective, Curt Manufacturing Inc., may repair or replace the product, at their option, when the product is returned, prepaid, with proof of purchase. Alteration to, misuse of, or improper installation of this product voids the warranty. Curt Manufacturing Inc.'s liability is limited to repair or replacement of products found to be defective, and specifically excludes liability for incidental or consequential loss or damage.