3rd Brake Light LED Ring

Part # HFB-01-003

Components and Hardware:

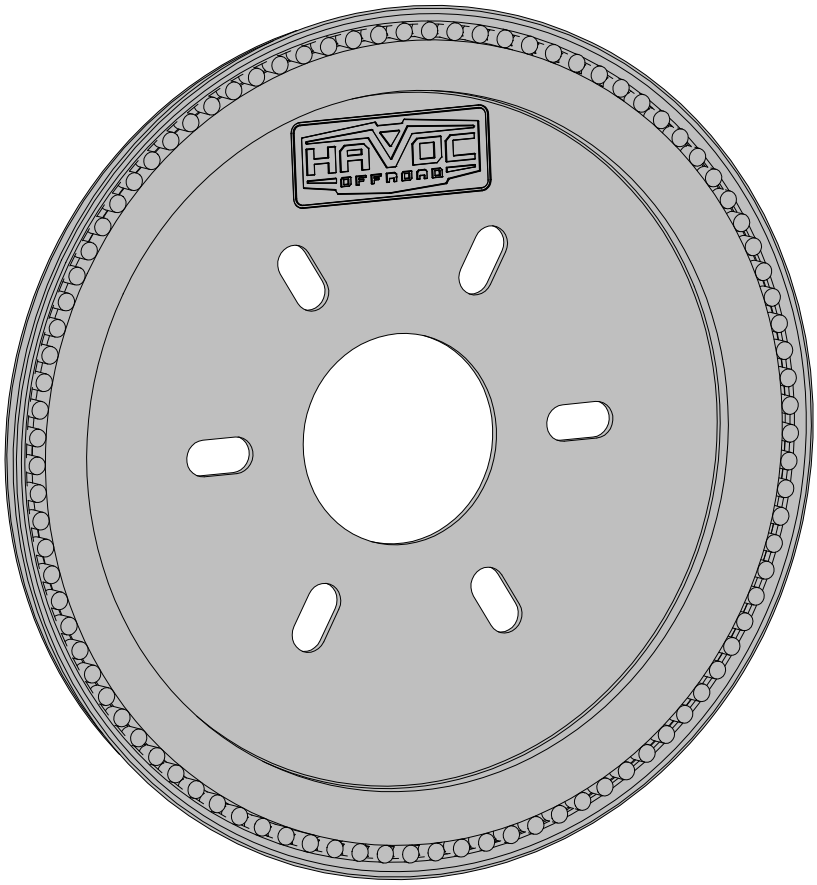

Components and Hardware:

1. 3rd Brake Light LED Ring.....(1)
2. Wire Harness.....(1)

Tools for Installation:

- Socket Wrench
- 19mm Socket
- Torx 25
- Torx 30

3rd Brake Light LED Ring

1. Remove spare tire from the tailgate.

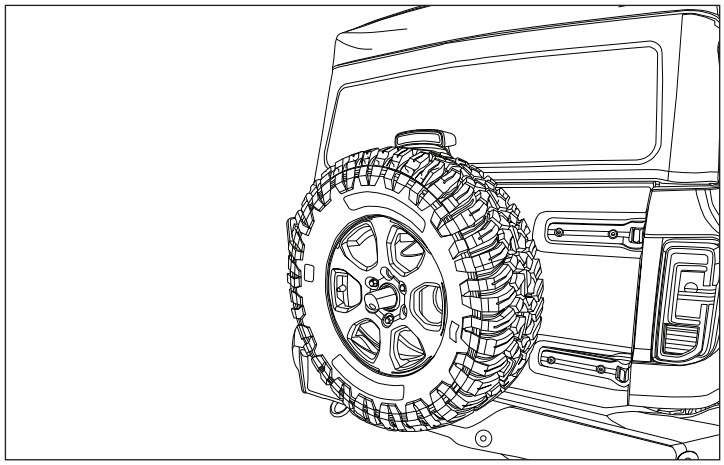

2. Remove the 4 screws holding the OE 3rd brake light to the tire carrier.

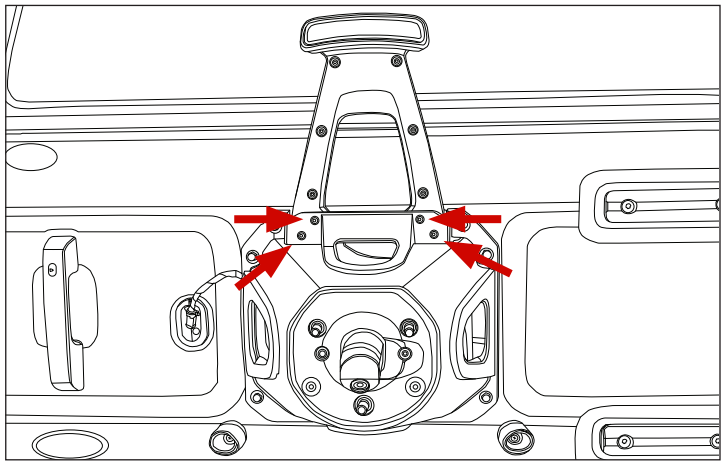

3. Remove the 8 screws on the OE 3rd brake light.

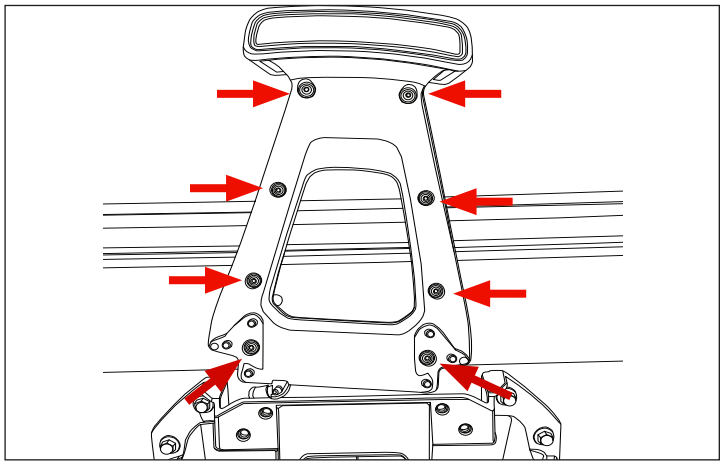

3rd Brake Light LED Ring

4. Gently pull the front and back halfs of the OE 3rd brake light apart.

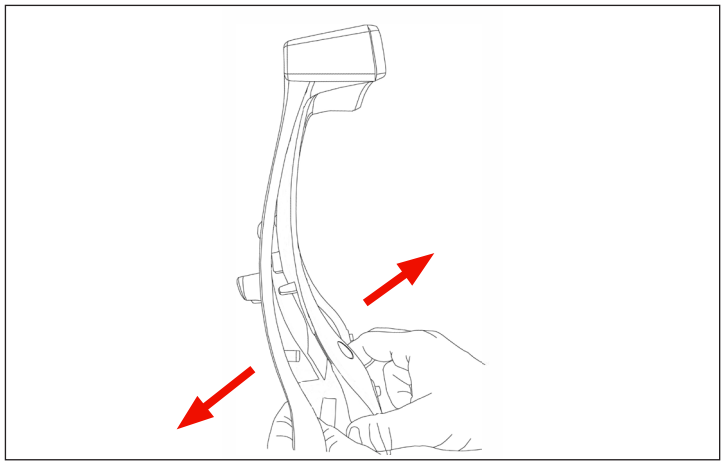

5. Disconnect the wire harness from the 3rd brake light.

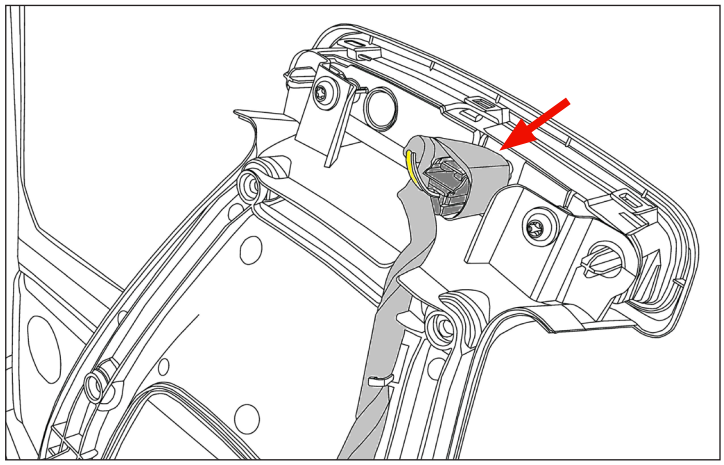

6. Using a pry tool, remove the plastic fastener at the bottom of the housing to fully separate the wire harenss from the OE 3rd brake light.

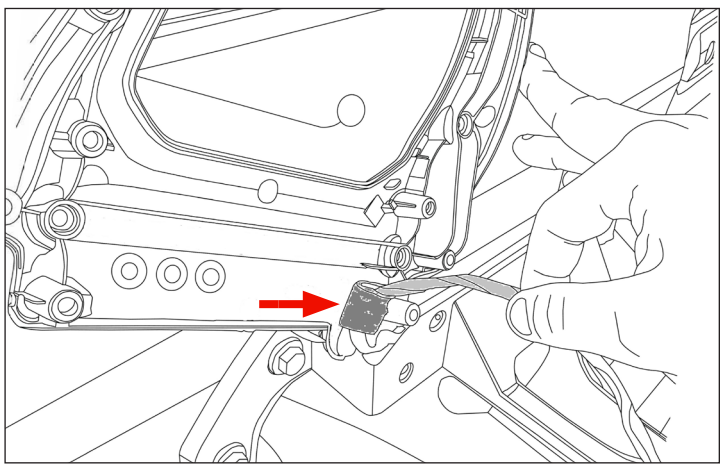

3rd Brake Light LED Ring

7. Plug the 3rd brake light ring wiring harness into the OE harness and into OE 3rd brake light.

Run the 3rd brake light ring wiring harness in the same channel on the OE 3rd brake light housing.

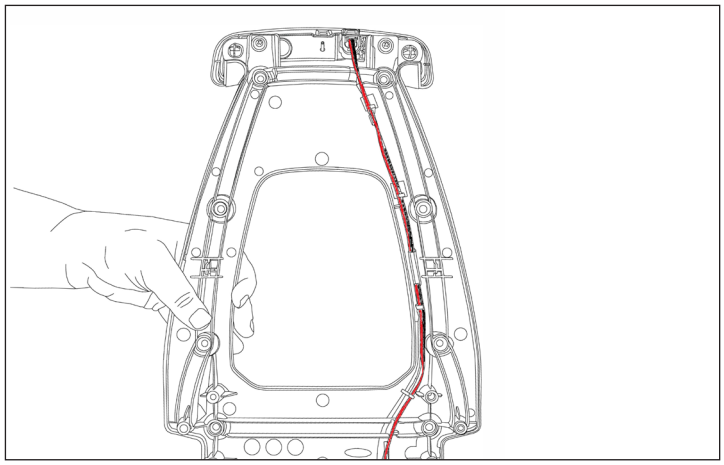

8. Reattach front and back half of housing, be careful not to pinch wires.

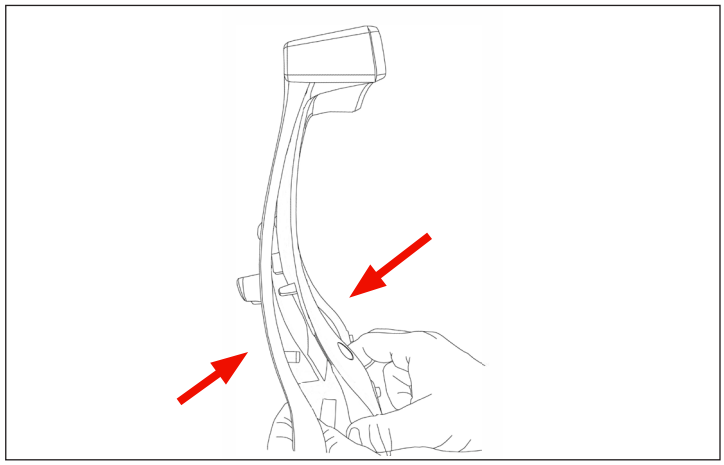

9. Reattach OE 3rd brake light to tire carrier.

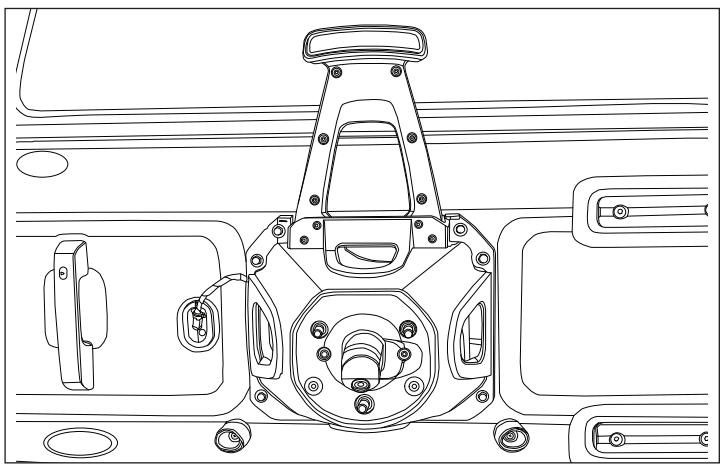

3rd Brake Light LED Ring

10. Place brake light ring on tire carrier. Plug in brake light ring to wiring harness.

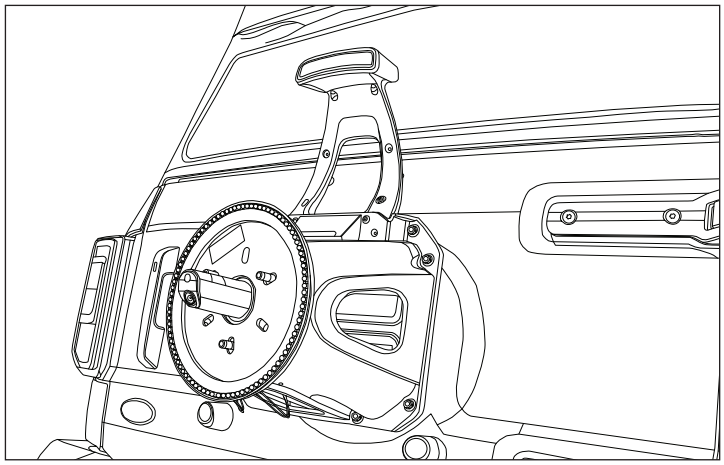

11. Install spare tire onto spare tire carrier.

